Leaded Inductors

Series/Type: B82144F

The following products presented in this data sheet are being withdrawn.

Ordering Code	Substitute Product	Date of Withdrawal	Deadline Last Orders	Last Shipments
B82144F1824J009		2025-08-22	2026-08-31	2027-02-28
B82144F1824J000		2025-08-22	2026-08-31	2027-02-28
B82144F1686J009		2025-08-22	2026-08-31	2027-02-28

Ordering Code	Substitute Product	Date of Withdrawal	Deadline Last Orders	Last Shipments
B82144F1686J000		2025-08-22	2026-08-31	2027-02-28
B82144F1685J009		2025-08-22	2026-08-31	2027-02-28
B82144F1685J000		2025-08-22	2026-08-31	2027-02-28
B82144F1684J009		2025-08-22	2026-08-31	2027-02-28
B82144F1684J000		2025-08-22	2026-08-31	2027-02-28
B82144F1683J009		2025-08-22	2026-08-31	2027-02-28
B82144F1683J000		2025-08-22	2026-08-31	2027-02-28
B82144F1682K009		2025-08-22	2026-08-31	2027-02-28
B82144F1682K000		2025-08-22	2026-08-31	2027-02-28
B82144F1565J009		2025-08-22	2026-08-31	2027-02-28
B82144F1565J000		2025-08-22	2026-08-31	2027-02-28
B82144F1563J009		2025-08-22	2026-08-31	2027-02-28
B82144F1563J000		2025-08-22	2026-08-31	2027-02-28
B82144F1476J009		2025-08-22	2026-08-31	2027-02-28
B82144F1476J000		2025-08-22	2026-08-31	2027-02-28
B82144F1475J009		2025-08-22	2026-08-31	2027-02-28
B82144F1475J000		2025-08-22	2026-08-31	2027-02-28
B82144F1474J009		2025-08-22	2026-08-31	2027-02-28
B82144F1474J000		2025-08-22	2026-08-31	2027-02-28
B82144F1473J009		2025-08-22	2026-08-31	2027-02-28
B82144F1473J000		2025-08-22	2026-08-31	2027-02-28
B82144F1472K009		2025-08-22	2026-08-31	2027-02-28
B82144F1472K000		2025-08-22	2026-08-31	2027-02-28
B82144F1336J009		2025-08-22	2026-08-31	2027-02-28
B82144F1336J000		2025-08-22	2026-08-31	2027-02-28
B82144F1335J009		2025-08-22	2026-08-31	2027-02-28
B82144F1335J000		2025-08-22	2026-08-31	2027-02-28
B82144F1334J009		2025-08-22	2026-08-31	2027-02-28
B82144F1334J000		2025-08-22	2026-08-31	2027-02-28
B82144F1333J009		2025-08-22	2026-08-31	2027-02-28
B82144F1333J000		2025-08-22	2026-08-31	2027-02-28
B82144F1332K009		2025-08-22	2026-08-31	2027-02-28
B82144F1332K000		2025-08-22	2026-08-31	2027-02-28
B82144F1226J009		2025-08-22	2026-08-31	2027-02-28
B82144F1226J000		2025-08-22	2026-08-31	2027-02-28
B82144F1225J009		2025-08-22	2026-08-31	2027-02-28
B82144F1225J000		2025-08-22	2026-08-31	2027-02-28
B82144F1224J009		2025-08-22	2026-08-31	2027-02-28

Ordering Code	Substitute Product	Date of Withdrawal	Deadline Last Orders	Last Shipments
B82144F1224J000		2025-08-22	2026-08-31	2027-02-28
B82144F1223K009		2025-08-22	2026-08-31	2027-02-28
B82144F1223K000		2025-08-22	2026-08-31	2027-02-28
B82144F1222K009		2025-08-22	2026-08-31	2027-02-28
B82144F1222K000		2025-08-22	2026-08-31	2027-02-28
B82144F1156J009		2025-08-22	2026-08-31	2027-02-28
B82144F1156J000		2025-08-22	2026-08-31	2027-02-28
B82144F1155J009		2025-08-22	2026-08-31	2027-02-28
B82144F1155J000		2025-08-22	2026-08-31	2027-02-28
B82144F1154J009		2025-08-22	2026-08-31	2027-02-28
B82144F1154J000		2025-08-22	2026-08-31	2027-02-28
B82144F1153K009		2025-08-22	2026-08-31	2027-02-28
B82144F1153K000		2025-08-22	2026-08-31	2027-02-28
B82144F1152K009		2025-08-22	2026-08-31	2027-02-28
B82144F1152K000		2025-08-22	2026-08-31	2027-02-28
B82144F1107J009		2025-08-22	2026-08-31	2027-02-28
B82144F1107J000		2025-08-22	2026-08-31	2027-02-28
B82144F1106J009		2025-08-22	2026-08-31	2027-02-28
B82144F1106J000		2025-08-22	2026-08-31	2027-02-28
B82144F1105J009		2025-08-22	2026-08-31	2027-02-28
B82144F1105J000		2025-08-22	2026-08-31	2027-02-28
B82144F1104J009		2025-08-22	2026-08-31	2027-02-28
B82144F1104J000		2025-08-22	2026-08-31	2027-02-28
B82144F1103K009		2025-08-22	2026-08-31	2027-02-28
B82144F1103K000		2025-08-22	2026-08-31	2027-02-28
B82144F1102K009		2025-08-22	2026-08-31	2027-02-28
B82144F1102K000		2025-08-22	2026-08-31	2027-02-28

Please contact your nearest TDK sales office if you need support in selecting a suitable substitute. The addresses of our worldwide sales network are presented at www.tdk-electronics.tdk.com/sales.

LBC chokes, axial leaded
Rated inductance 1 … 100000 µH
Rated current 20 … 2500 mA

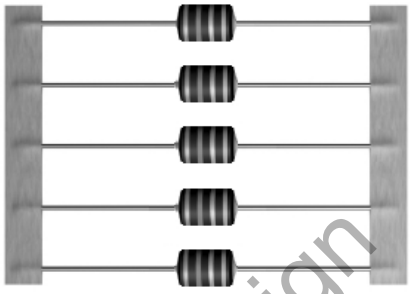

Not Recommended for New Design

Construction

- Large ferrite drum core
- Winding: enamel copper wire
- Flame-retardant lacquer coating

Features

- Very wide inductance range
- High rated current
- Suitable for wave soldering
- RoHS-compatible

Applications

- RF blocking and filtering
- Decoupling and interference suppression
- For telecommunications, automotive electronics, energy-saving lamps, entertainment electronics

Terminals

- Central axial lead
- Base material CuAg0.1
- Electroplated with nickel and pure tin

Marking

- Inductance indicated by color bands in accordance with IEC 60062

Delivery mode and packing unit

- Taped, reel packing
- Packing unit:

	Ammo (pcs./pack)	Reel (pcs./reel)
B82144F	1200	1500

Dimensional drawing

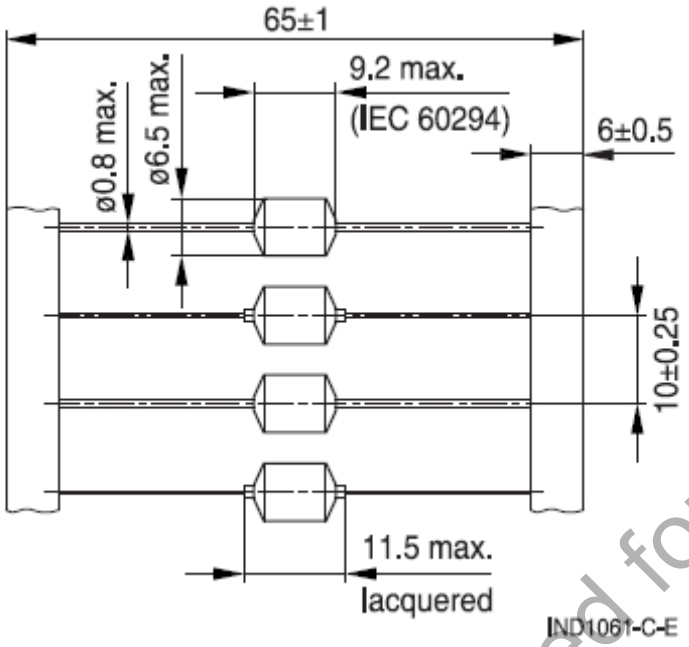

Dimensions in mm

Packing

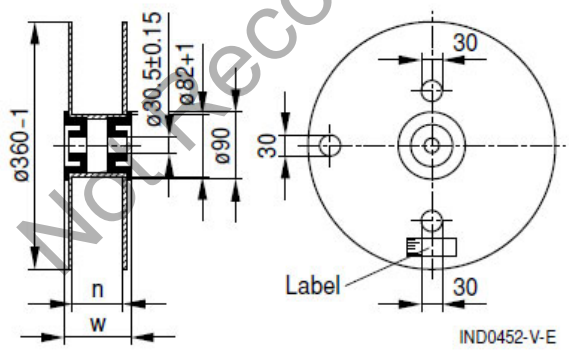

n (mm): 72 + 1
w (mm): 84 max.

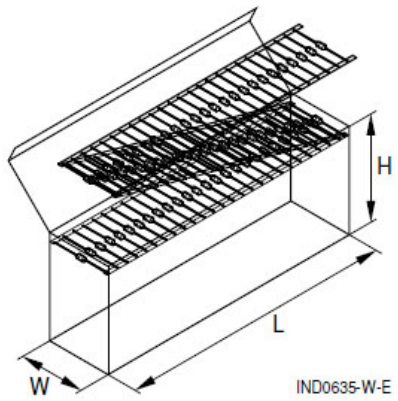

L × B × H (max. mm): 275 × 75 × 140

Dimensions in mm

Not Recommended for New Design

Technical data and measuring conditions

Rated inductance L_R	Measured with LCR meter Agilent 4284A or impedance analyzer Agilent 4294A Measuring frequency: $L_R \leq 10$ µH = 1 MHz 10 µH < $L_R \leq 4700$µH = 100 kHz $L_R > 4700$µH = 10 kHz Measuring current: ≤ 1 mA Measuring temperature: +20 ºC
Q factor Q_{min}	Measured with precision impedance analyzer Agilent 4294A, +20 °C
Rated temperature T_R	+40 °C
Rated current I_R	Maximum permissible DC current at rated temperature
Inductance decrease $\Delta L/L_0$	≤ 10% (referred to initial value) at I_R, +20 ºC
DC resistance R_{max}	Measured at +20 ºC
Resonance frequency $f_{res,min}$	Measured with Agilent 4294A or 8753ES, +20 °C
Solderability (lead-free)	Sn95.5Ag3.8Cu0.7: +(245 ±5) °C, (+3 ±0.3) s Wetting of soldering area ≥ 90% (to IEC 60068-2-20, test Ta)
Resistance to soldering heat	(+260 ±5)°C, +10 s (to IEC 60068-2-20. test Tb)
Tensile strength of leads	≥ 20 N (to IEC 60068-2-21. test Ua)
Climatic category	55/125/56 (to IEC 60068-1)
Storage conditions	Mounted: –55 °C … +125 °C Packaged: –25 °C … +40 °C, ≤ 75% RH
Weight	Approx. 0.95 g

Mounting information

When bending the leads, take care that the start-of-winding areas at the face ends (protected by glue and lacquer) are not subjected to any mechanical stress.

Not Recommended for New Design

Characteristics and ordering codes

L_R [µH]	Tolerance[1)]	Q_{min}	f_Q [MHz]	I_R [mA]	R_{max} [Ω]	$f_{res,min}$ [MHz]	Ordering code[2)]
1.0	±10% ≙ K	25	7.96	2500	0.06	200	B82144F1102K000
1.5		25	7.96	2300	0.07	180	B82144F1152K000
2.2		25	7.96	2100	0.09	140	B82144F1222K000
3.3		25	7.96	1950	0.10	120	B82144F1332K000
4.7		25	7.96	1800	0.12	100	B82144F1472K000
6.8		25	7.96	1600	0.15	60	B82144F1682K000
10		60	2.52	1500	0.18	24	B82144F1103K000
15		60	2.52	1400	0.22	17	B82144F1153K000
22		50	2.52	1250	0.28	12	B82144F1223K000
33	± 5% ≙ J	40	2.52	1100	0.35	8.0	B82144F1333J000
47		40	2.52	900	0.41	7.0	B82144F1473J000
56		40	2.52	850	0.47	7.0	B82144F1563J000
68		30	2.52	800	0.52	6.2	B82144F1683J000
100		40	0.796	760	0.70	5.2	B82144F1104J000
150		40	0.796	670	0.90	4.5	B82144F1154J000
220		40	0.796	550	1.30	3.8	B82144F1224J000
330		30	0.796	500	1.70	3.2	B82144F1334J000
470		30	0.796	400	2.20	2.9	B82144F1474J000
680		20	0.796	340	3.10	2.6	B82144F1684J000
820		20	0.796	310	3.70	2.4	B82144F1824J000
1000		60	0.252	280	4.20	2.2	B82144F1105J000
1500		60	0.252	230	6.40	1.9	B82144F1155J000
2200		60	0.252	180	9.50	1.5	B82144F1225J000
3300		60	0.252	150	13.8	1.3	B82144F1335J000
4700		60	0.252	120	21.0	1.1	B82144F1475J000
5600		60	0.252	110	28.0	1.0	B82144F1565J000
6800		60	0.252	100	30.0	0.9	B82144F1685J000
10000		50	0.0796	85	42.0	0.75	B82144F1106J000
15000		50	0.0796	50	75.0	0.50	B82144F1156J000
22000		50	0.0796	40	120	0.40	B82144F1226J000
33000		50	0.0796	35	150	0.30	B82144F1336J000
47000		40	0.0796	30	230	0.26	B82144F1476J000
68000		40	0.0796	25	290	0.20	B82144F1686J000
100000		40	0.0796	20	490	0.18	B82144F1107J000

[1)] Closer tolerance on request.
[2)] For Ammo pack the last digit has to be a “9”. Example: B82144F1223K009

Not Recommended for New Design

Impedance |Z| versus frequency f
measured with impedance analyzer Agilent 4294A or S-parameter network analyzer Agilent 8753ES, typical values at +20°C

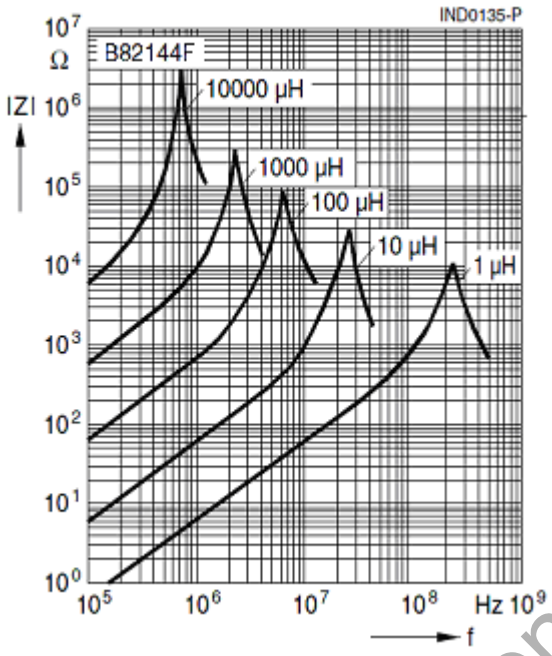

Inductance L versus DC load current I_{DC}
measured with LCR meter Agilent 4284A, typical values at +20°C

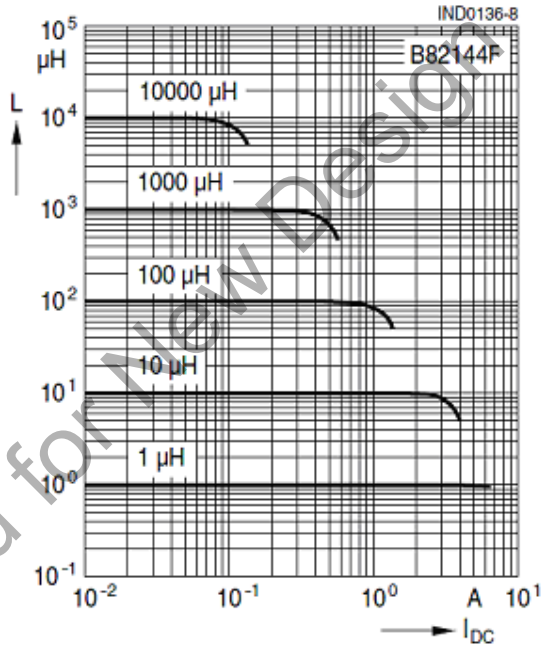

Q factor versus frequency f
measured with impedance analyzer Agilent 4294A, typical values at +20°C

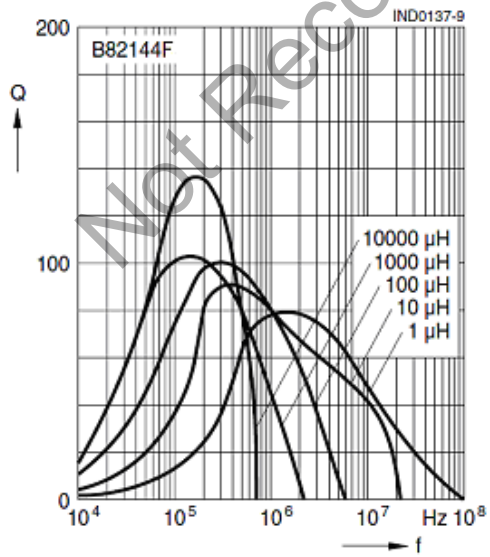

Current derating I_{OP}/I_R versus ambient temperature T_A
(rated temperature T_R = +40°C)

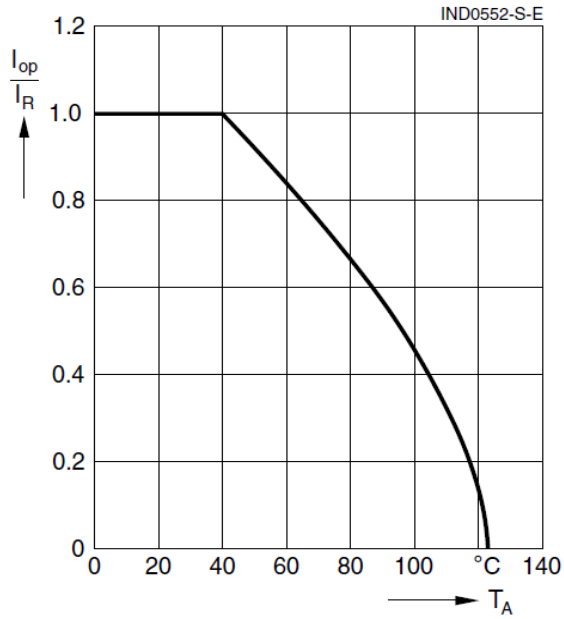

Not Recommended for New Design

Cautions and warnings

- Please note the recommendations in our Inductors data book (latest edition), online catalogs and in the data sheets.
  - Particular attention should be paid to the derating curves, if given. Derating applies in the case the ambient temperature in application exceeds the rated temperature of the component.
  - Ensure the operation temperature of the component in application not to exceed the maximum specified value or the upper climatic category temperature.
  - The soldering conditions should also be observed. Temperatures quoted in relation to wave soldering refer to the pins only. Temperatures specified in relation to reflow soldering can also refer to the pins or terminals for products with larger thermal mass, as in such cases, the temperature difference to the top of the component is too big (e.g., high proportion of core within the component).

- If the components are to be washed or varnished it is necessary to check whether the washing or varnish agent that is used has a negative effect on the wire insulation, any plastics that are used, or on glued joints. It is possible for washing or varnish agent residues to have a negative effect in the long-term on wire insulation.
  Washing processes may damage the product due to the possible static or cyclic mechanical loads (e.g. ultrasonic cleaning). They may cause cracks to develop on the product and its parts, which might lead to reduced reliability or lifetime.

- The following points must be observed if the components are potted, sealed, or varnished in customer applications:
  - Many potting, sealing, or varnishing materials shrink as they harden. They therefore exert a pressure on the plastic housing or core. This pressure can have a deleterious effect on electrical properties, and in extreme cases can damage the core or plastic housing mechanically.
  - It is necessary to check whether the potting, sealing, or varnishing materials used attack or destroy the wire, wire insulation, plastics or glue.
  - The effect of the potting, sealing, or varnishing materials may change the high-frequency behavior of the components.
  - Many coating materials have a negative effect (chemically and mechanically) on the winding wires, insulation materials and connecting points. Customers are always obliged to determine whether and to what extent their coating materials influence the component. Customers are responsible and bear all risk for the use of the coating material. TDK Electronics does not assume any liability for failures of our components that are caused by the coating material.

- Magnetic core materials such as ferrites are sensitive to direct impact. This can cause the core material to flake or lead to breakage of the magnetic core material.

- Any type of tension or pressure on the product may result in damage and affect its functionality and reliability.
  - The products are only to be attached to fixings or mounting holes provided for this purpose in accordance with the data sheet.
  - If additional mechanical forces are applied to the component, e.g., application of gap pads, it is necessary to check whether they attack or destroy any part of the component.
  - It is not permitted for the product specified in the data sheet to assume a mechanical function in the final application.

- Inductance value can drop if external metallic or magnetic parts will be put close to the coil or into the air gap of the coil or core or magnetic material.

- Even for customer-specific products, conclusive validation of the component in the circuit can only be carried out by the customer.

Display of ordering codes for TDK Electronics products

The ordering code for one and the same product can be represented differently in data sheets, data books, other publications, on the company website, or in order-related documents such as shipping notes, order confirmations and product labels. **The varying representations of the ordering codes are due to different processes employed and do not affect the specifications of the respective products.** Detailed information can be found on the Internet under www.tdk-electronics.tdk.com/orderingcodes.

Important notes

The following applies to all products named in this publication:

1 Some parts of this publication contain **statements about the suitability of our products for certain areas of application**. These statements are based on our knowledge of typical requirements that are often placed on our products in the areas of application concerned. We nevertheless expressly point out **that such statements cannot be regarded as binding statements about the suitability of our products for a particular customer application**. As a rule we are either unfamiliar with individual customer applications or less familiar with them than the customers themselves. For these reasons, it is always ultimately incumbent on the customer to check and decide whether a product with the properties described in the product specification is suitable for use in a particular customer application.

2 We also point out that **in individual cases, a malfunction of electronic components or failure before the end of their usual service life cannot be completely ruled out in the current state of the art, even if they are operated as specified**. In customer applications requiring a very high level of operational safety and especially in customer applications in which the malfunction or failure of an electronic component could endanger human life or health (e.g. in accident prevention or life-saving systems), it must therefore be ensured by means of suitable design of the customer application or other action taken by the customer (e.g. installation of protective circuitry or redundancy) that no injury or damage is sustained by third parties in the event of malfunction or failure of an electronic component.

3 **The warnings, cautions and product-specific notes must be observed**.

4 In order to satisfy certain technical requirements, **some of the products described in this publication may contain substances subject to restrictions in certain jurisdictions (e.g. because they are classed as hazardous)**. Useful information on this will be found in our Material Data Sheets on the Internet (www.tdk-electronics.tdk.com/material). Should you have any more detailed questions, please contact our sales offices.

5 We constantly strive to improve our products. Consequently, **the products described in this publication may change from time to time**. The same is true of the corresponding product specifications. Please check therefore to what extent product descriptions and specifications contained in this publication are still applicable before or when you place an order.
We also **reserve the right to discontinue production and delivery of products**. Consequently, we cannot guarantee that all products named in this publication will always be available. The aforementioned does not apply in the case of individual agreements deviating from the foregoing for customer-specific products.

6 Unless otherwise agreed in individual contracts, **all orders are subject to our General Terms and Conditions of Supply**.

7 **Our manufacturing sites serving the automotive business apply the IATF 16949 standard**. The IATF certifications confirm our compliance with requirements regarding the quality management system in the automotive industry. Referring to customer requirements and customer specific requirements (“CSR”) TDK always has and will continue to have the policy of respecting individual agreements. Even if IATF 16949 may appear to support the acceptance of unilateral requirements, we hereby like to emphasize that **only requirements mutually agreed upon can and will be implemented in our Quality Management System**. For clarification purposes we like to point out that obligations from IATF 16949 shall only become legally binding if individually agreed upon.

8 The trade names EPCOS, CarXield, CeraCharge, CeraDiode, CeraLink, CeraPad, CeraPlas, CSMP, CTVS, DeltaCap, DigiSiMic, FilterCap, FormFit, InsuGate, LeaXield, MediPlas, MiniBlue, MiniCell, MKD, MKK, ModCap, MotorCap, PCC, PhaseCap, PhaseCube, PhaseMod, PhiCap, PiezoBrush, PlasmaBrush, PowerHap, PQSine, PQvar, SIFERRIT, SIFI, SIKOREL, SilverCap, SIMDAD, SiMic, SIMID, SineFormer, SIOV, SurfIND, ThermoFuse, WindCap, XieldCap are **trademarks registered or pending** in Europe and in other countries. Further information will be found on the Internet at www.tdk-electronics.tdk.com/trademarks.

Release 2024-02