SPECIFICATION

RoHS+HSF
COMPLIANT

PRODUCT NAME: SMD cofiring inductor

YOUR PART NO.:

OUR PART NO.: MPF100760-D Series

VERSION: V2.0

RECEPTION THE SPECIFICATION HAS BEEN ACCEPTED. **COMPANY:** DATE:		
CFMD	CHKD	RCVD

Confidential for Microgate

MANUFACTURING NAME

SHENZHEN MICROGATE TECHNOLOGY CO., LTD
Address: Microgate Technology Building, No. 16,
Technology Road, Pingshan, Shenzhen, China.
Postcode: 518118
Tel: 86-755-28085000

CFMD.	CHKD.	DSGD.
Charles	Lu Denghui	Wang Yusheng

CATALOG

	Component SPEC Version Record……	3
1	Scope……	4
2	Product Identification……	4
3	Appearance and Dimensions……	4-5
4	Testing Conditions……	6
5	Electrical Characteristics And Test Instruments……	6
6	Reliability……	7-8
7	Recommended Soldering Condition……	9
8	Packaging……	10
9	Products Storage……	11
10	Environment……..	11

Confidential for Microgate

Component SPEC Version Record

Rev.	Effective Date	Changed Contents	Change Reasons	Approved By
1.0	2021.08.20	New released	/	Charles
2.0	2026.01.08	Update specifications	/	Charles

Confidential for Microgate

1. Scope

This specification applies to the MPF series of SMD cofiring inductors.

2. Product Identification

MPF	100760HF	85N	M	**	D	LF
①	②	③	④	⑤	⑥	⑦

① Product Symbol
② Dimensions
③ Inductance Value (85N:85nH R10:0.10uH 1R0:1.0uH)
④ Inductance Tolerance (M:±20%)
⑤ Process code
⑥ Multiple inductance
⑦ Lead-Free

3. Appearance and Dimensions

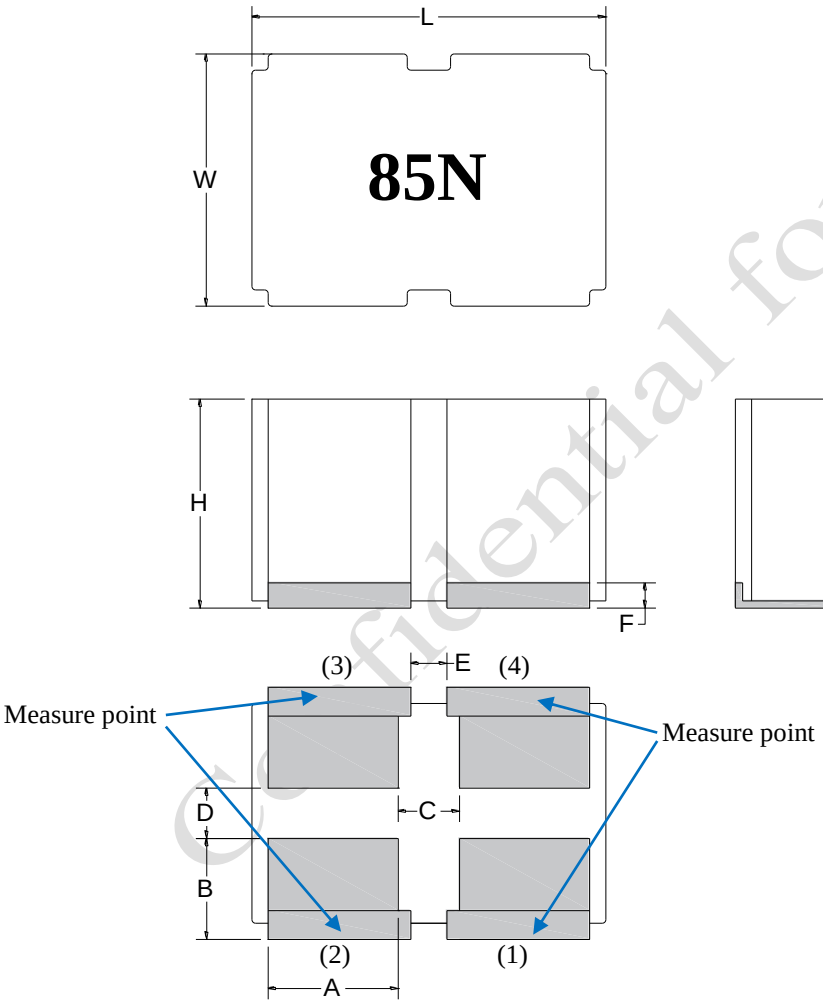

Dimensions in mm	
L	9.8±0.2
W	7.0±0.2
H	5.8±0.2
A	3.6±0.3
B	2.8±0.3
C	1.7±0.3
D	1.4±0.3
E	1.0 ref.
F	0.9 ref.
h	0.2 ref..

Note1: DCR measurement point:(1),(4) or (2),(3)
Note2: Pads coplanarity P1~P4<0.1mm

Confidential for Microgate

Recommended land pattern (Unit: mm)

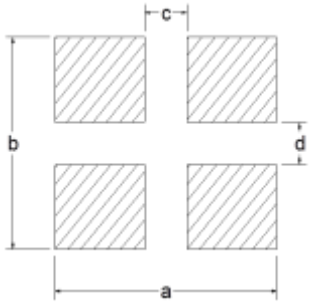

a	9.6
b	7.6
c	1.6
d	1.2

Equivalent circuit

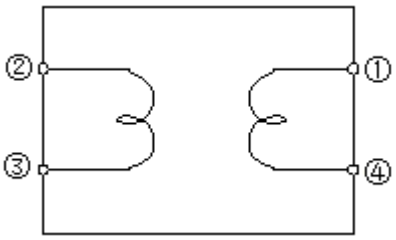

Confidential for Microgate

4. Testing Conditions

Unless otherwise specified, the standard conditions for measurement/test as:
Ambient Temperature : 5 to 35℃
Relative Humidity: 25 to 85% RH
Atmospheric Pressure: 86 to 106 kPa

If any doubt on the results, measurements/tests should be made within the following limits:
Ambient Temperature : 25±1℃
Relative Humidity: 60 to 70% RH
Atmospheric Pressure: 86 to 106 kPa

5. Electrical Characteristics And Test Instruments

Microgate Part No.	Inductance L0(nH) 100KHz/1V	DCR (mΩ)		Isat (A)		Irms(A)	
		Max	Typ.	Max	Typ.	Max	Typ.
MPF100760HF85NM**DLF	85±20%	0.16	0.10	75	80	55	60

Test instruments and remarks

* All test data is referenced to 25℃ ambient.
* L test by CHROMA 3302 meter or equivalent.
* DCR test by Tonghui TH2516B meter or equivalent.
* CHROMA 3302 and 1320 meter for IDC.
* Isat: DC current (A) that will cause L0 to drop approximately 30%.
* Irms: DC current (A) that will cause an approximate ΔT of 40℃.
* The rated current as listed is either the saturation current or the heating current depending on which value is lower.

*Operating temperature range: -55℃ ~+125℃.(Including self-heating).

* The part temperature (ambient + temp rise) should not exceed 125℃ under worse case operating conditions. Circuit design, component placement, PCB trace size and thickness, airflow and other cooling provision all affect the part temperature. Part temperature should be verified in the end application.

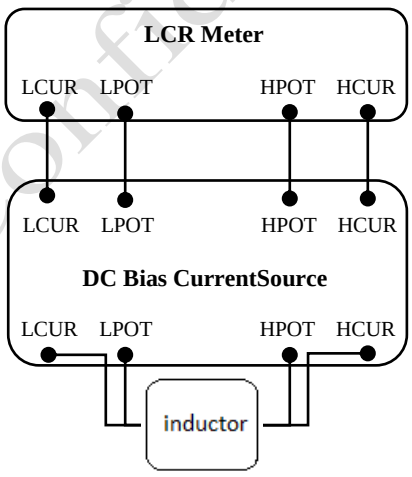

Isat test schematic diagram

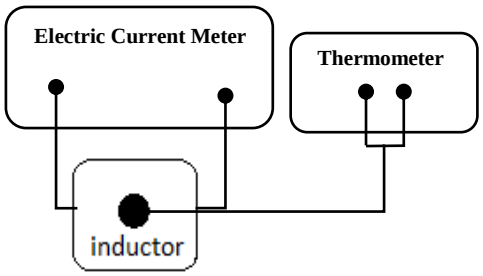

Irms test schematic diagram

Confidential for Microgate

6. Reliability

Item	Test Item	Test Condition	Criteria	Sample size
1	Electrical Test	In accordance with spec	test all electrical parameters and all electrical parameters meet spec	60PCS
2	Mechanical/Visual Inspection	In accordance with spec	Dimensions and lead meet spec	10PCS
3	Precondition	SMD:J-STD-020D,3 times reflow	1）no physical damage. 2）all the electrical parameters need to be meet the spec after the experiment except that the change of inductance should be ±10% within	60PCS
4	Operational Heat Life	MIL-STD-202, method 108: 1. Temperature: Operating Temprature+10℃/-5℃ 2. Duration: 1000 hours 3. Powered	1、No physical damage. 2、all the electrical parameters need to be meet the spec after the experiment except that the change of inductance should be ±10% within 3、age must be more than 10 years	77pcs*3
5	Humidity	MIL-STD-202, method 103 1. Temperature: 85 ℃, 2. Humidity: 85% RH 3. Unpowered 4. Duration: 1000 hrs	1、all the area with rust less than 10% 2、all the electrical parameters need to be meet the spec after the experiment except that the change of inductance should be ±10% within 3、0pcs fail	30pcs
6	Thermal Shock	MIL-STD-202, method 107: 1. Low temperature: -40℃ 2. High temperature: + 125℃（≤28g） High temperature: + 85℃(>28g) 3. Soak time: 15 minutes （≤28g） Soak time: 30 minutes (>28g) 4. Transition time: ≥55℃/min. 5. Number of cycles: 1000	1、No physical damage. 2、all the electrical parameters need to be meet the spec after the experiment except that the change of inductance should be ±10% within 3、0pcs fail	30pcs
7	Resistance to High Temperature	MIL－STD-202G method 108 1）max operation temperature 2）Duration:1000 hours 3）Unpowered	1、No physical damage. 2、all the electrical parameters need to be meet the spec after the experiment except that the change of inductance should be ±10% within 3、0pcs fail	30PCS
8	Vibration Test	MIL-STD-202, method 204 1. Gravity: 5 G 2. Frequency: 10 ~ 55 ~ 10 Hz 3.Direction:3(X , Y , Z), each 12 cycles 4. Duration: 20 minutes in each direction	1、No physical damage. 2、all the electrical parameters need to be meet the spec after the experiment except that the change of inductance should be ±10% within 3、0pcs fail	10PCS

Confidential for Microgate

Item	Test Item	Test Condition	Criteria	Sample size
9	Resistance to Soldering Heat	SMD:J-STD-020D,3 times reflow(if Precondition is done， this item is not needed)	1、No physical damage.all 2、all the electrical parameters need to be meet the spec after the experiment except that the change of inductance should be ±10% within 3、0pcs fail	30PCS
10	Solderability	J-STD-002： 1. 8hours steam age test 2、Flux type： ROL0 3. Solder: 245℃±5℃	(in magnification 50X)The wetting area of the electrode shall be at least 95% covered with new solder coating.	10PCS

Confidential for Microgate

7. Recommended Soldering Conditions

(1) Reflow soldering conditions

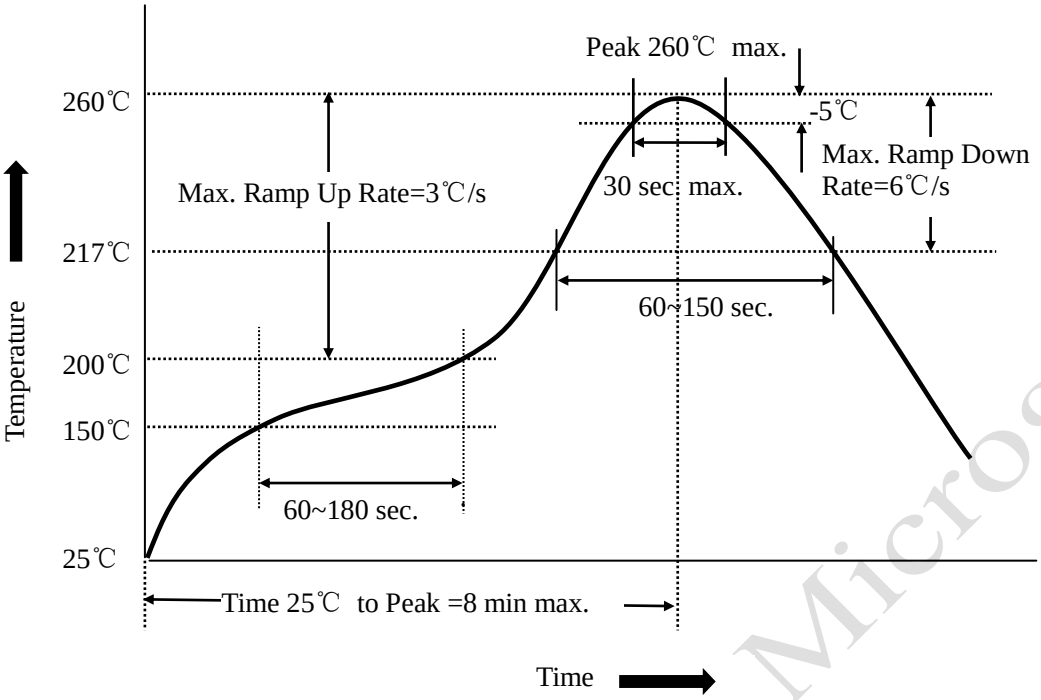

*Above reflow soldering curve is from J-STD-020D.

(2) Iron soldering

The following conditions must be strictly followed when using a soldering iron.

Pre-heating	150℃ 1 minute
Tip temperature	350℃ max
Soldering iron output	30w max
End of soldering iron	Φ1mm max
Soldering time	3 seconds max

Confidential for Microgate

8.Packaging

(1) Dimension of tape (Unit: mm)

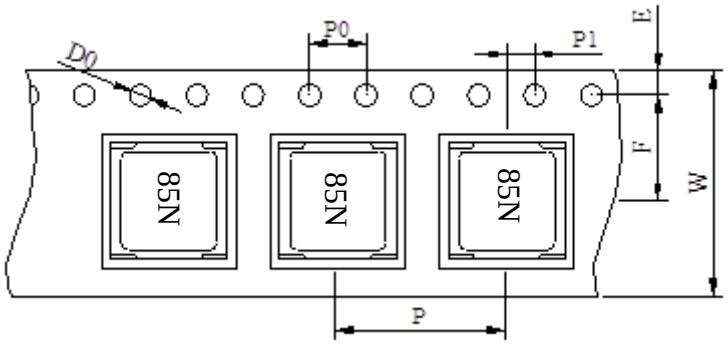

W	24.0±0.3
F	11.5±0.1
E	1.75±0.1
P	12.0±0.1
P0	4.0±0.1
P1	2.0±0.05

(2) Dimension of reel (Unit: mm)

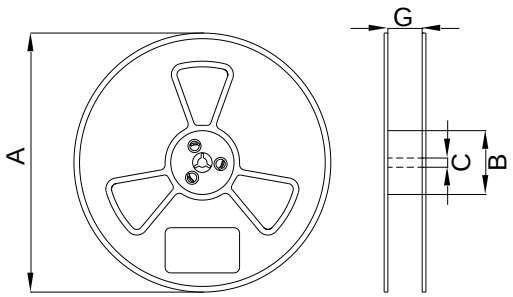

Symbol	Dimension
A	330±2
B	100±2
C	13.5±0.2
G	25.4±1.0

(3) Taping figure and drawing direction

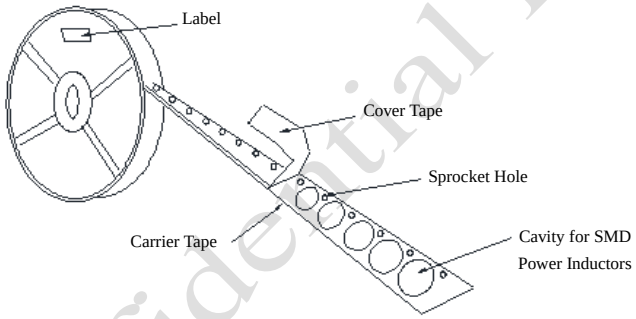

(4) Packaging quantities: 500PCS/Reel.

(5) Peeling strength of cover tape:

The peel force of top cover tape shall be between 0.1N to 1.3 N.

*the peel force standard is from EIA-481-D

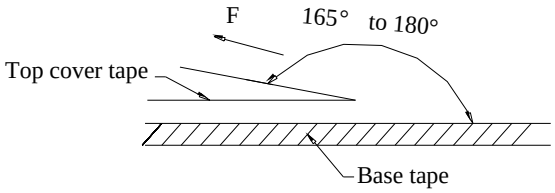

Room Temp. (℃)	Room Humidity (%)	Room aim (hpa)	Peel Speed mm/min
5-35	45-85	860-1060	300

Confidential for Microgate

9. Products Storage

(1) Storage period

Products which inspected in MICROGATE over 24 months ago should be examined and used, which can be confirmed with inspection No. marked on the container. Solderability should be checked if this period is exceeded.

（2） Storage conditions

Products should be storage in the warehouse on the following conditions:

Temperature: -10 ~+ 35℃

Humidity: Less than 80% relative and humidity

No rapid change on temperature and humidity.

（3） Don’t keep products in corrosive gases such as sulfur, chlorine gas or acid, or it may cause oxidization of electrode, resulting in poor solderability.

（4） Products should be storage on the palette for the prevention of the influence from humidity, dust and so on.

（5） Products should be storage in the warehouse without heat shock, vibration, direct sunlight and so on.

（6） Products should be storage under the airtight packaged condition.

10. Environment

Compliant with RoHS, Halogen-free, REACH regulations. Test report is available upon request.

Confidential for Microgate