CUSTOMER: 日期 DATE:

RoHS+HSF
COMPLIANT

纳入仕样书
SPECIFICATION

产 品 名 称 PRODUCT NAME: 叠层片式铁氧体大电流电感

Multilayer Chip Ferrite Large Current Inductor

贵 司 料 号 YOUR PART NO.:

敝 司 料 号 OUR PART NO.: MGFL2016UF Type

版本号 VERSION NO.: V1.3

接受 RECEPTION THE SPECIFICATION HAS BEEN ACCEPTED. 该纳入仕样书已被我司接受 日期: DATE： 公司： COMPANY：

批准 CFMD	审核 CHKD	接收 RCVD

本纳入仕样书共 18 页

MANUFACTURING NAME

深圳市麦捷微电子科技股份有限公司
SHENZHEN MICROGATE TECHNOLOGY CO.，LTD
TEL：86-755-28085000
FAX：86-755-28085605

CFMD. 批准	CHKD. 审核	DSGD. 担当
梁启新	简丽勇	曾艳锋

纳入仕样书改定履历 MODIFY HISTORY OF SPECIFICATION

O.	DATE	CONTENT	REV	APPROVED
1	2001.03.31	初稿:制定(有铅) First draft (lead)	1.0	张海恩
2	2004.02.01	二稿:产品改进(符合 RoHS 标准) Second draft: product improvement (RoHS standard)	1.1	张海恩
3	2005.01.01	三稿:回流焊曲线引用 IPC/JEDEC J-STD-020C 标准 Third draft:reflow curve quote J-STD-020C IPC/JEDEC standard	1.2	张海恩
4	2017.06.01	四稿:优化性能 Fourth draft: optimize performance	1.3	陈鑫

目录 CATALOG

1 适用范围 Scope..... 4
2 品名构成 Product Identification..... 4
3 形状、尺寸和材料 Appearance, Dimensions and Material..... 4
4 测试条件 Testing Conditions..... 5
5 标称值 Rating..... 6
6 电气特性 Electrical Performance..... 7
7 信赖性试验 Reliable Performance..... 8
8 焊接条件 Recommended Soldering Conditions..... 10
9 清洗条件 Cleaning Conditions..... 12
10 包装 Packaging..... 13
11 装箱清单及标志 Packing documents and marking..... 15
12 保管 Storage..... 17
13 溴素系难燃剂的使用情况 Usage of Nonflammable Material..... 18
14 ODS 的使用情况 Usage of ODS..... 18
15 阻燃级别 Flammability Class..... 18
16 注意事项 Note..... 18

1 适用范围 Scope

本纳入仕样书适用于 MGFL 系列叠层片式铁氧体大电流电感。

This specification applies to the MGFL series of multilayer chip ferrite Large Current inductors.

2 品名构成 Product Identification

MGFL	2016	UF	1R0	M	T	-	LF
①	②	③	④	⑤	⑥		⑦

① 产品系列 Product Symbol

② 产品尺寸 Dimensions（见 3）

③ 基本材料代码 Material Code（铁氧体材料 UF）

④ 电感量 Inductance Value (1R0: 1.0μH)

⑤ 允许容差 Inductance Tolerance (M:±20%; N:±30%)

⑥ 包装方式（B：散装；T：盘装）Packaging Style (B:; Bulk; T: Tape & Reel)

⑦ 环保标识 Lead Free

3 形状、尺寸和材料 Appearance, Dimensions and Material

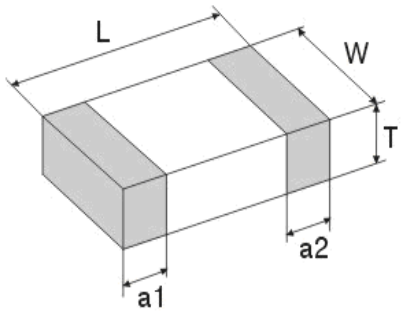

Type 型号	Dimensions (mm) [inch]			
	L长	W宽	T高	a1, a2
2016	2.00+0.30/-0.10 [0.079+0.012/-0.004]	1.60±0.20 [0.063±0.008]	0.90±0.10 [0.035±0.004]	0.50±0.30 [0.02±0.012]

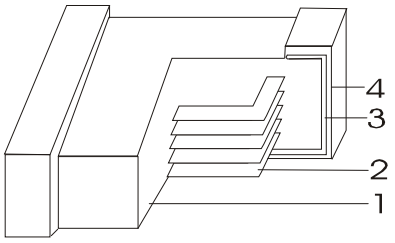

	构成 Composition	材料 Material
1	基本材料 Base Material	铁氧体(Ni-Cu-Zn 系列) Ferrite (Ni-Cu-Zn series)
2	内导体 Internal Conductor	银 Ag
3	端电极 Terminal Electrode	银 Ag
4	端电极 Terminal Electrode	镍-锡 Ni-Sn

4 测试条件 Testing Conditions

除非另有规定，否则在以下条件下测试 <Unless otherwise specified>
温度 Temperature : Ordinary Temperature (5 to 35℃)
湿度 Humidity : Ordinary Humidity (25 to 85% RH)

当对测量结果有疑问时<In case of doubt>
温度 Temperature : 20±2℃
湿度 Humidity : 60 to 75% RH
大气压强 Atmospheric Pressure : 86 to 106 kPa

5 标称值 Rating

操作温度范围 Operating Temperature Range : -55 to +125℃

保存温度范围 Storage Temperature Range : -55 to +125℃

Customer Part No.	Microgate Part No.	Inductance (μH)	L Test Freq. (MHz)	RDC (Ω) ± 30%	IR*1 (mA) max	IR*2 (mA) max
	MGFL2016UFR47MT-LF	0.47±20%	1	0.09	1600	1500
	MGFL2016UFR68MT-LF	0.68±20%	1	0.10	1300	1500
	MGFL2016UF1R0MT-LF	1.0±20%	1	0.11	1200	1400
	MGFL2016UF1R5MT-LF	1.5±20%	1	0.15	700	1200
	MGFL2016UF2R2MT-LF	2.2±20%	1	0.15	500	1200

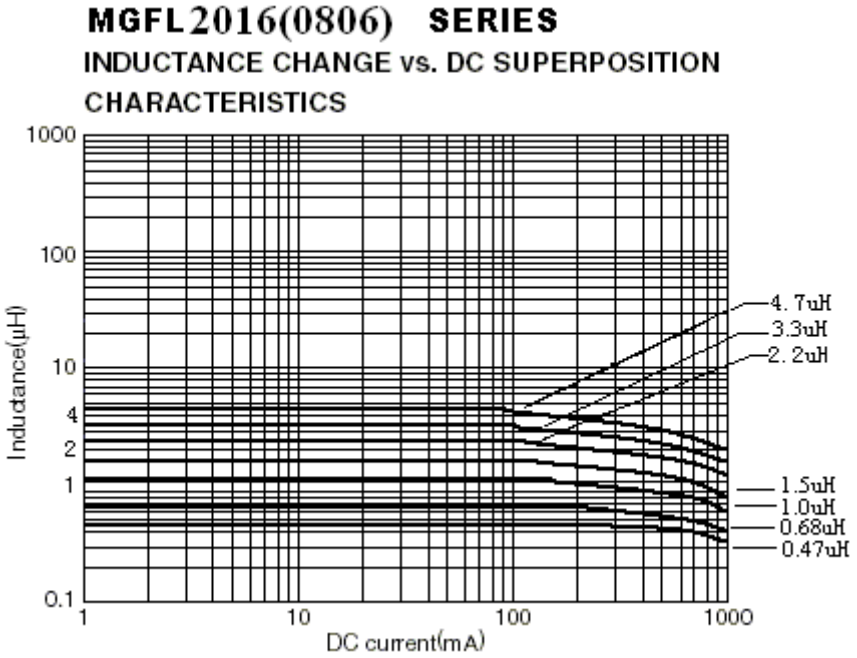

6 电气特性 Electrical Performance

6.1 电感量;Inductance;

按表 1 所列条件测量时，电感量应符合条款 5。

Inductance; shall meet item 5 when measured on the condition of Table 1.

Table 1

测量设备 Measuring Equipment	阻抗分析仪 E4991A 或其他 Impedance analyzer E4991A or equivalent
测量频率 Measuring Frequency	见条款 5 (see item 5)
测量信号 Measuring signal level	50mV

6.2 直流电阻 DC Resistance

按表 2 所列条件测量时，直流电阻应符合条款 5。

D.C Resistance shall meet item 5 when measured on the condition of Table 2.

Table 2

测量设备 Measuring Equipment	台式毫欧表 TH2513 或其他 Desktop milliohmmeter TH2513 or equivalent

6.3 额定电流 Rated current

IR*1.基于电感变化的标准值:因直流重叠的特性而使电感值比初始值下降 30%的电流值。

Rated current based on inductance variation: Current when inductance decreases by 30% of the initial value due to direct current superimposed characteristics.

IR*2.基于产品温度上升的标准值:产品温度上升达到+40℃时的电流值.

Rated current based on increasing product temperature: Current when temperature of the product reaches +40°C

Table 4

测量设备 Measuring Equipment	直流电源 Chroma1302 和适配器 Chroma3302 DC power Chroma 1302 and Adapter Chroma 3302

6.4 焊接变化率 Variance after Soldering

当经过焊接条件（255ºC 浸锡 3.5 秒）后，电感量变化率：0.001μH ~ 220μH：±20%。

Inductance change shall be within 0.001μH ~ 220μH: ±20% and when the inductor is dipped into solder for 3.5 seconds which is 255ºC.

Table 5

测量设备 Measuring Equipment	阻抗分析仪 HP4291 或其他；焊接炉 Impedance analyzer HP4291 or equivalent Solder furnace

7 信赖性试验 Reliable Performance

<table>
<tr><th>NO.</th><th>Item 项目</th><th>Specifications 规范</th><th>Test Methods 测试方法</th></tr>
<tr><td>1</td><td>Solder-Ability
可焊性</td><td>More than 90% of termination should be covered with new solder.
端电极焊锡覆盖率为 90%以上</td><td>Solder 焊锡: Sn 纯锡
Temperature 焊锡温度: 255℃+5℃/-0℃
Flux 助焊剂: rosin 松香
Duration 浸渍时间: 3.5±0.5s</td></tr>
<tr><td>2</td><td>Leaching Resistance
耐焊性</td><td>More than 75% of termination Should be covered with new solder.
端电极焊锡覆盖率为 75%以上</td><td>Solder 焊锡: Sn 纯锡
Temperature 焊锡温度: 270℃+2℃/-0℃
Flux 助焊剂: rosin 松香
Duration 浸渍时间: 10±0.5s</td></tr>
<tr><td>3</td><td>Bending Strength
弯曲试验</td><td>No mechanical damage should be noticed
不应见机械损伤</td><td>When the board curve to 2mm (0.079 inch)
当板弯曲挠度达 2㎜ 时：
<table><tr><th>Size</th><th>A(mm)</th></tr><tr><td>2016</td><td>1.0</td></tr></table>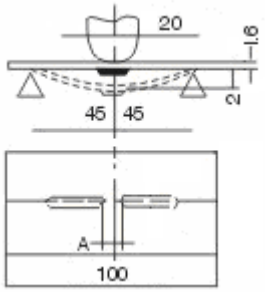</td></tr>
<tr><td>4</td><td>Body Strength
抗压强度</td><td>No mechanical damage should be noticed
不应见机械损伤</td><td>Applied specified pull strength in axial direction
在轴向上施加拉力如下：
<table><tr><th>Size</th><th>A/mm</th><th>P/N</th></tr><tr><td>2016</td><td>1.4</td><td>9.8</td></tr></table>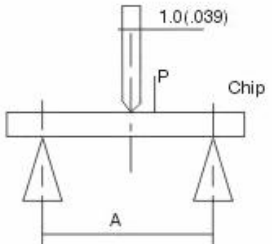</td></tr>
<tr><td>5</td><td>Terminal Strength
端头强度</td><td>The terminal and body should be no damage
端头和瓷体不应见损伤</td><td>Applied specified pull strength in axial
在轴向上施加拉力如下：
<table><tr><th>Size</th><th>Pull Strength</th><th>Time (s)</th></tr><tr><td>2016</td><td>10 N</td><td>5±1</td></tr></table>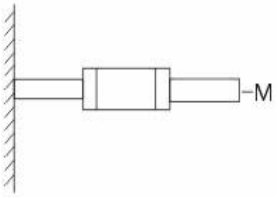</td></tr>
</table>

NO.	Item 项目	Specifications 规范	Test Methods 测试方法
6	Drop 跌落	1.No mechanical damage shall be noticed 外观无可见机械损伤 2. Inductance shall be within 电感量变化率: 1μH ~ 4.7μH: ±5%	Drop 10 times on a concrete floor from a height of 1m. 从距混凝土地面 1m 高度自由落下，重复 10 次
7	Vibration 振动		Frequency 频率: 10 to 55Hz Amplitude 振幅: 1.52mm Direction and time 方向及时间: X, Y and Z directions for 2 hours each.
8	Humidity resistance 耐潮湿		a. Test condition 试验条件 Temp. 温度: 60±2℃ Humidity 湿度: 90%~95% Test time 试验时间: 1000 h b. Measurement method 测量条件: The component should be stabilized at normal condition for 24 hours before test. 试验后常温常湿环境中放置（24±2）小时后测量
9	High temperature resistance 耐高温		a. Test condition 试验条件 Applied rated current 施加额定电流 Temp. 温度: 125±2℃ Test time 试验时间: 1000 h b. Measurement method 测量条件: The component should be stabilized at normal condition for 24 hours before test. 试验后常温常湿环境中放置（24±2）小时后测量
10	Low temperature resistance 耐低温		a. Test condition 试验条件 Temp. 温度: -55±2℃ Test time 试验时间: 1000 h b. Measurement method 测量条件: The component should be stabilized at normal condition for 24 hours before test. 试验后常温常湿环境中放置（24±2）小时后测量
11	Thermal shock 热冲击		a. Test condition 试验条件 1) Temp. 温度: -55℃, time 时间: 30±3min 2) Temp. 温度: +125℃, time 时间: 30±3min 100 cycles b. Measurement method 测量条件: The component should be stabilized at normal condition for 24 hours before test. 试验后常温常湿环境中放置（24±2）小时后测量

8 焊接条件 Recommended Soldering Conditions

产品可用于波峰焊和回流焊

Product can be applied to flow and reflow soldering.

⑴ 焊剂 Flux, Solder

① 使用松香助焊剂，禁止使用卤化物含量起过 0.2wt%的强酸性助焊剂。

Use rosin-based flux. Don't use highly acidic flux with halide content exceeding 0.2wt% (chlorine conversion value).

② 使用纯锡焊料

Use Sn solder.

⑵ 波峰焊条件 Flow soldering conditions

① 预热时，产品表温与焊料温度的温差最大不允许超出 150℃，焊接完后冷却时，产品表温与溶剂温度之间的温差最大不允许超出 100℃。预热不足有可能引发产品表面裂纹，导致产品品质下降。

Pre-heating should be in such a way that the temperature difference between solder and product surface is limited to 150℃ max. Cooling into solvent after soldering also should be in such a way that temperature difference is limited to 100℃ max. Unwrought pre-heating may cause cracks on the product, resulting in the deterioration of products quality.

② 标准波峰焊曲线 Standard soldering profile.

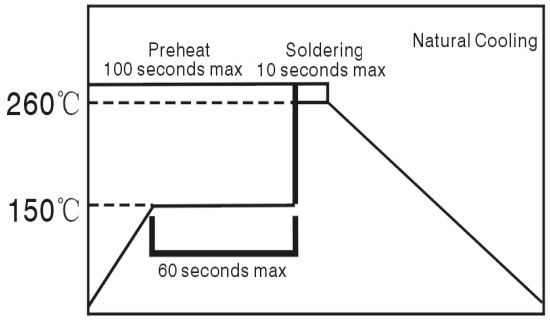

预热 Pre-heating	150℃,1 minute min
最高温度 Peak	260℃,10 seconds max

⑶ 回流焊条件 Reflow soldering conditions

Profile Feature	**Lead-Free Assembly**
Average Ramp-Up Rate (Tsmax to Tp)	3℃ C/second max.
Preheat – Temperature Min (Tsmin) – Temperature Max (Tsmax) – Time (tsmin to tsmax) min to tsmax)	150 ℃ 200 ℃ 60-180 seconds

Profile Feature	Lead-Free Assembly
Time maintained above: – Temperature (TL) – Time (tL)	217 ℃ 60-150 seconds
Peak/Classification Temperature (Tp) Peak/Classification Time (Tp)	260 ℃ 3-4 seconds
Time within 5 °C of actual Peak Temperature (tp)	20-40 seconds
Ramp-Down Rate	6°C/second max.
Time 25 °C to Peak Temperature	8 minutes max.

Note 1: All temperatures refer to topside of the package, measured on the package body surface.

标准回流焊曲线 Standard soldering profile

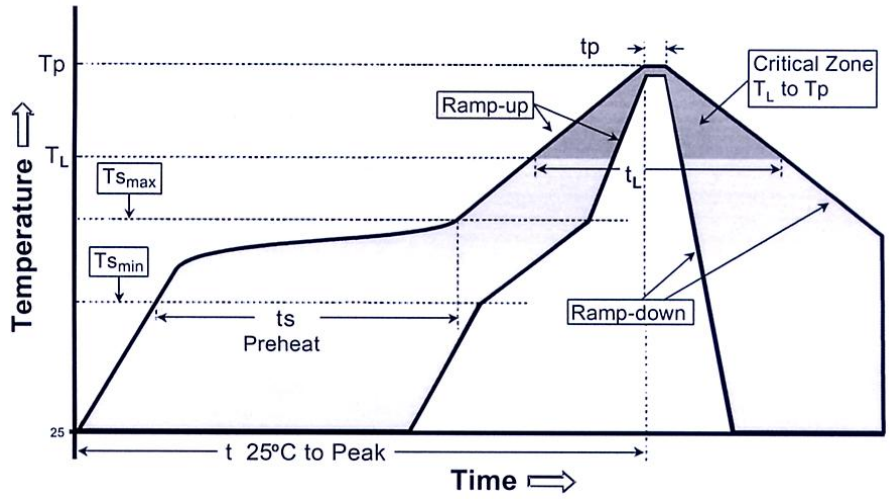

⑷ 手工返工 Reworking with soldering iron

当使用电烙铁进行手工焊接时，以下条件必须严格遵守

The following conditions must be strictly followed when using a soldering iron.

预热 Pre-heating	150℃, 1 minute
尖端温度 Tip temperature	350℃ max
输出功率 Soldering iron output	80w max
电烙铁头尖端尺寸 End of soldering iron	Φ1mm max
焊接时间 Soldering time	3 seconds max

9 清洗条件 Cleaning Conditions

产品清洗时应遵循以下条件

Products shall be cleaned on the following conditions.

⑴ 清洗温度最高不超过 60℃。（若是氟化物类和酒精类清洁剂，温度最高不超过 40℃）

Cleaning temperature shall be limited to 60℃ max.(40℃ max for fluoride and alcohol type cleaner.)

⑵ 为了避免印刷线路板及其上所安装器件出现共振现象，在进行超声波清洗时，应严格遵循以下条件

Ultrasonic cleaning shall comply with the following conditions with avoiding the resonance phenomenon at the mounted products and P.C.B.

功率 Power : 20W/t max

频率 Frequency: 40 kHz 以下

时间 Time : 5 minutes max

⑶ 清洁剂 Cleaner

a) 可选类型 Alternative cleaner

异丙基醇 Isopropyl alcohol (IPA) HCFC-225

b) 含水剂 Aqueous agent

表面活性剂类 Surface Active Agent Type (CLEANTHROUGH 750H)

碳氢化合物类 Hydrocarbon Type (TECHNOCLEANER 335)

高分子醇类 Higher Alcohol Type (PINE ALPHA ST-100S)

碱性皂类 Alkali Saponification Type (*AQUACLEANER 240)

⑷ 清洗后，产品上不应有助焊剂和清洁剂驻留；若使用了含水剂，为了彻底洗去清洁剂，产品应在去离子水冲洗后完全晾干或烘干。

Thee shall be no residual flux and residual cleaner after cleaning. In the case of using aqueous agent, products shall be dried completely after rinse with de-ionized water in order to remove the cleaner.

⑸ 其他清洁方式 Other cleaning

请联系我们 Please contact us.

10 包装 Packaging

⑴ 编带尺寸 Dimensions of Tape:

纸带/塑带 Paper / Embossed carrier tape:

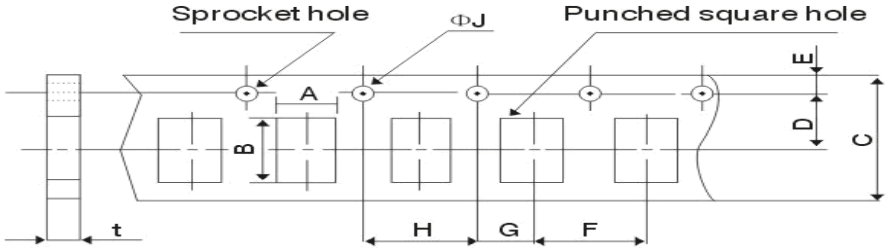

Unit: mm

Type	2016
T*	0.90±0.10
	Paper carrier tape
A	2.0±0.2
B	2.5±0.2
C	8.0±0.3
D	3.5±0.05
E	1.75±0.1
F	4.0±0.1
G	2.0±0.05
H	4.0±0.1
ΦJ	1.5+0.1/-0
t(max)	1.1±0.05

T*：Product thickness

⑵ 带轮尺寸 Dimensions of Reel

Unit: mm

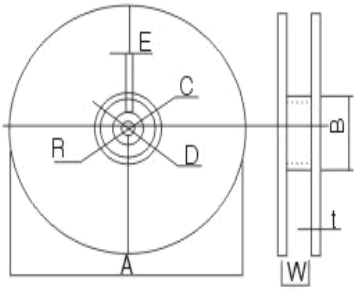

Reel material: PS (Polystyrene)

A	178±2
B	60±2
C	13.0±0.5
D	21.0±0.8
E	2.0±0.5
W	10.0±1.15
t	1.2±0.2
R	1.0±0.25

⑶ 编带抗拉强度 Pulling strength of tapes

载带 Carrier tape	10N or more (1kgf or more)
上盖带 Cover tape	5N or more (0.5kgf or more)

⑷ 编带简图及拉伸方向 Taping figure and drawing direction

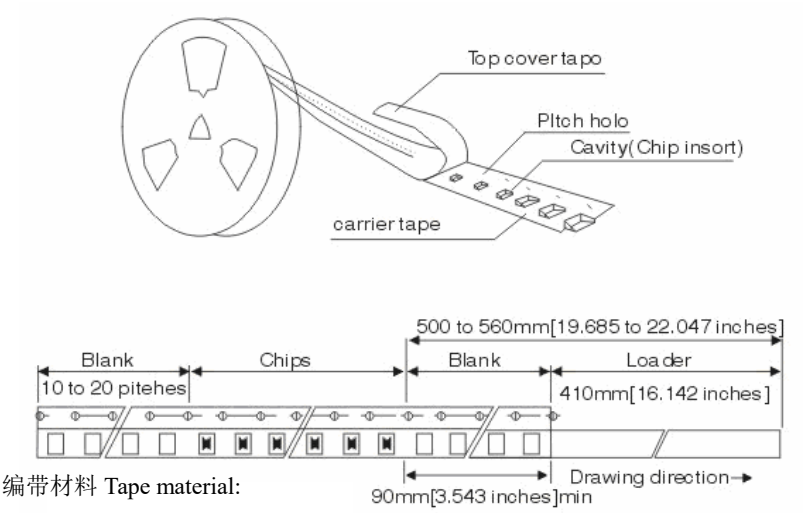

编带材料 Tape material:

基带 Base tape: 纸带 cardboard

盖带 Cover tape: 聚乙烯 polyethylene

⑸ 盖带剥离强度 Peeling strength of cover tape

盖带 Cover tape	0.3~0.7N (30gf~70gf)

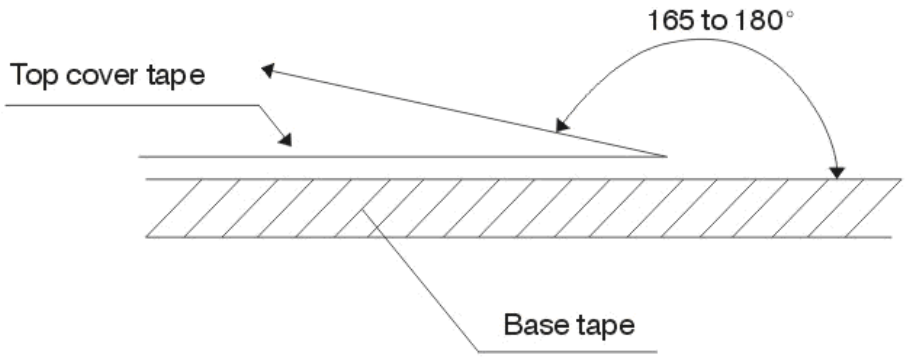

测试条件 Test condition:

1) 剥离角度 peel angle: 165°~180° vs. carrier tape.
2) 剥离速度 peel speed: 300 mm/min±10%.

⑹ 包装箱盒尺寸 Box and case dimensions

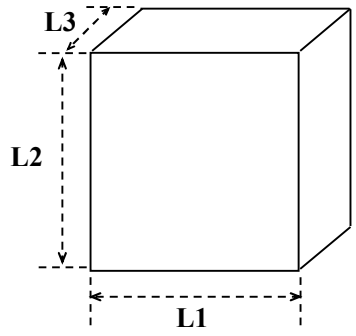

Unit: mm

Type	L1	L2	L3
Box	180±2	180±2	75±1
Box	180±2	180±2	120±2
Case	400±2	400±2	200±2

A 一盒六盘，一箱十盒 6 reels in a box.

B 一盒十盘，一箱六盒 10 boxes in a case.

⑺ 包装数量 Packaging quantities

Type	Thickness(mm)	Bulk	Tape and reel
2016	0.90±0.10	----	3000pcs

11 装箱清单及标志 Packing documents and marking

⑴ 包装文件 Packing documents

Packing includes the following:

a. 装箱清单 Packing list.

b. 合格证书 Certificate of compliance.

⑵ 盘上标记 Marking on reels:

a 型号 MICROGATE Part No.

b 生产批号 Lot number

c 盘装数量 Quantity per reel

d 检验员号 Inspector No.

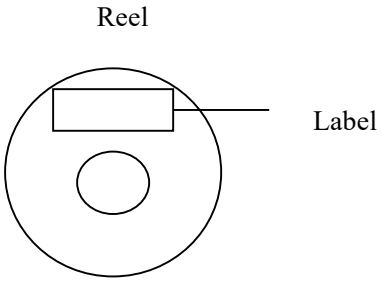

以上内容必须在标签上注明.All above shall be shown on marking label

麦捷公司标签如下所示：MICROGATE marking label will be as following:

MICROGATE

CUSTOMER:	P. O. NO	
CUSTOMER PART NO:	DATE CODE	LOT NO
MG PART NO:	QUANTITY	INSP. NO

MG PART NO

麦捷公司生产编号如下列所示:MICROGATE Lot number will be as per the following example:

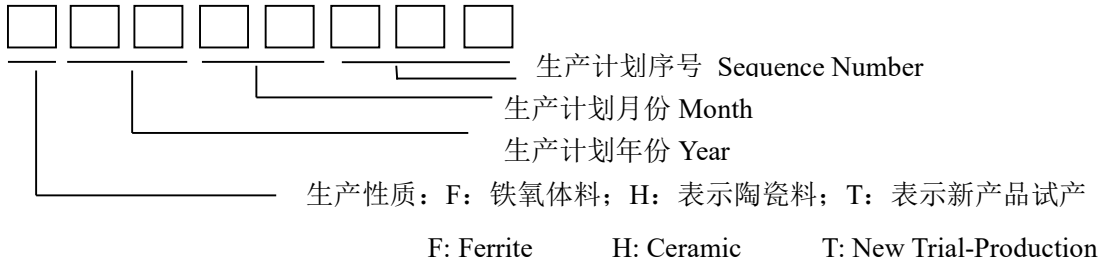

检验合格后，检验员在标签上盖上合格章。合格章如下所示：

The eligible reels will be pressed a mark onto the surface. The mark will be as following:

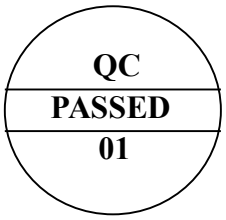

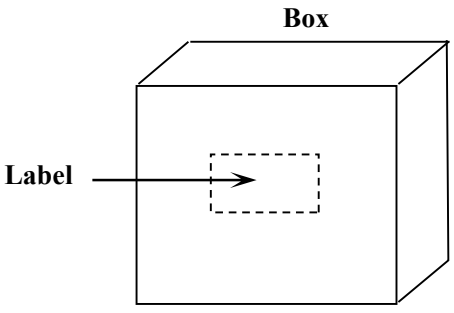

⑶ 内包装盒标记:Marking on inner box

a 型号 MICROGATE Part No.

b 每盒数量 Quantity per box

c 包装日期 Date

以上内容必须在标签上注明（标签见 11.2 所示）。

Above shall be shown on marking label (The marking label is shown in item 11.2).

⑷ 外包装箱标记 Marking on outer case:

1) 制造商 Manufacturer: “MICROGATE” will be marked on ①

“中国深圳制造” “Made in Shenzhen CHINA” will be marked on ②

2) 发运标记 Ship marking:

“向上” “UP”, “小心轻放”“HAND CARE”, “防潮”“MOISTURE-PROOF” will be marked on 2).

3) 包装标签包括以下内容 Packing label include the following:

a. 型号 MICROGATE Part No

b. 总数量 Total quantity per case

c. 包装日期 Date;

以上内容必须在标签上注明。(标签见 11.2 所示)

All above shall be shown on marking label.

(The marking label is shown in item 11.2)

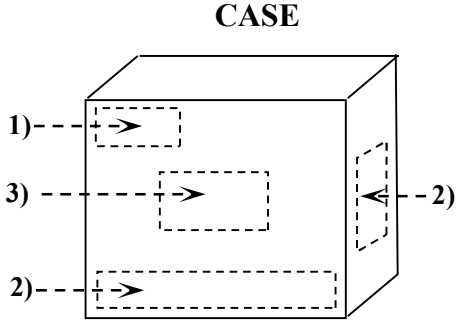

12 保管 Storage

⑴ 保管期限 Storage period

距麦捷出厂检验时间六个月内，产品可以使用；检验时间可以通过包装外侧标记的检验号确认；若时间超出六个月，应检查焊接性能后方可使用。

Products which inspected in MICROGATE over 6 months ago should be examined and used, which can be confirmed with inspection No. marked on the container. Solder ability should be checked if this period is exceeded.

⑵ 保管条件 Storage conditions

① 存放货物的库房应满足以下条件

Products should be storage in the warehouse on the following conditions

温度 Temperature: ≦40℃

湿度 Humidity : ≦70% relative humidity

不允许温、湿度有极剧变化。

No rapid change on temperature and humidity

② 禁止将产品保管在腐蚀性物质中，例如硫磺、氯气或者酸，否则将引起端头氧化，导致降低焊接性。

Don’t keep products in corrosive gases such as sulfur, chlorine gas or acid, or it may cause oxidization of electrode, resulting in poor solder ability.

③ 为了避免受潮气、灰尘等物质的影响，产品应保管于货架上。

Products should be storage on the palette for the prevention of the influence from humidity, dust and so on.

④ 产品保管在库房中时，应避免热冲击，振动以及直接光照等等。

Products should be storage in the warehouse without heat shock, vibration, direct sunlight and so on.

⑤ 产品应密封包装

Products should be storage under the airtight packaged condition.

13 溴素系难燃剂的使用情况 Usage of Nonflammable Material

对于以下所列物质，我司在生产过程中绝不使用，最终成品中也绝不含用。

For these materials listed below, we don't use in process.

镉、汞、砷及其化合物，PCB 等等。Cd, Hg, As and its compound, PCB, etc.

PBBS, PBBOs, PBDO, PBDE, PBB.

14 ODS 的使用情况 Usage of ODS

对于以下所列的 ODS 物质，我司在生产过程中绝不使用，最终成品中也绝不含有。

For ODS listed below, we don't use in process.

四氧化碳，HCFC 等等。ODS: CCL_4, HCFC, etc. ODS。

15 阻燃级别 Flammability Class

UL 94V-1

16 注意事项 Note

①.本纳入仕样书保证我司产品作为一个单体时的质量情况。当我司产品被安装到贵司产品上时，请保证贵司的产品已根据贵司的规范进行了有效评价和确认。

This product specification guarantees the quality of our product as a single unit. Please make sure that your product is evaluated and confirmed against your specifications when our product is mounted to your product.

②. 如果贵司对我司产品的使用已超过了本测试规范所界定的产品功能，那么对于由此引发的失效，我司将不予保证。

We cannot warrant against failure caused by any use of our product that deviates from the intended use as described in this product specification.

③. 请加盖接受同意章，并在本测试规范提交日后两个月内传回或寄回复印件。如果在以上期限内未收到复印件，将被默认为已被接受。

Please return our copy of this product specification in two month after issued date with your signature of receipt. If the copy is not returned by the date, this product specification will be deemed to have been received.