客户 CUSTOMER: 日期 DATE:

规格书
SPECIFICATION

产 品 名 称 PRODUCT NAME: Diplexer	
贵 司 料 号 YOUR PART NO.:	
敝 司 料 号 OUR PART NO.:	MDPX21M0917P69-D15
版 本 号 VERSION.:	V2.3

接受 RECEPTION THE SPECIFICATION HAS BEEN ACCEPTED. 该规格书已被我司接受 日期: DATE： 公司： COMPANY：		
批准 CFMD	审核 CHKD	接收 RCVD

本规格书共 12 页

MANUFACTURING NAME

深圳市麦捷微电子科技股份有限公司
SHENZHEN MICROGATE TECHNOLOGY CO。，LTD
TEL：86-755-28085000
FAX：86-755-28085605

CFMD. 批准	CHKD. 审核	DSGD. 担当
梁启新	付迎华	曾艳峰

规格书改定履历 MODIFY HISTORY OF SPECIFICATION

Ver.	DATE	CONTENT	APPROVED
1.0	2018.01.23	初稿 Constitute	梁启新
2.0	2019.01.08	增加全温插损 Add Full Temperature Insertion Loss	梁启新
2.1	2020.08.21	更新电性能参数 Modify Electrical Characteristics	付迎华
2.2	2021.04.30	更新 Mark 形状和颜色 Update the mark	付迎华
2.3	2023.01.10	拓展低频频率范围 698~960MHz→600~960MHz Extend the Low Frequency Range 698~960MHz→600~960MHz	付迎华

目录 CATALOG

1 适用范围 Scope 4
2 品名构成 Product Identification 4
3 形状、尺寸和材料 Appearance, Dimensions and Material 4
4 测试条件 Testing Conditions 5
5 电气性能 Electrical Characteristics 5
6 信赖性试验 Reliable Performance 6
7 焊接条件 Recommended Soldering Conditions 7
8 包装 Packaging 9
9 装箱清单及标志 Packing documents and marking 10
10 保管 Storage 12

1 适用范围 Scope

麦捷 Diplexer（MDPX 系列）产品设计用于 5G、LTE、WIFI、Bluetooth、PDA 和无绳电话机中，具有低的插入损耗、高的衰减和小体积 SMD 片式设计，能减少复杂的调校工作，可以简化电路设计。

"Microgate" Microwave Diplexer series are designed to be used in 5G、LTE、WIFI、Bluetooth,、PDA & Cordless phones with low insertion loss and high attenuation as well as small size SMD chip design, which can simplify your complex tuning and circuit design.

2 品名构成 Product Identification

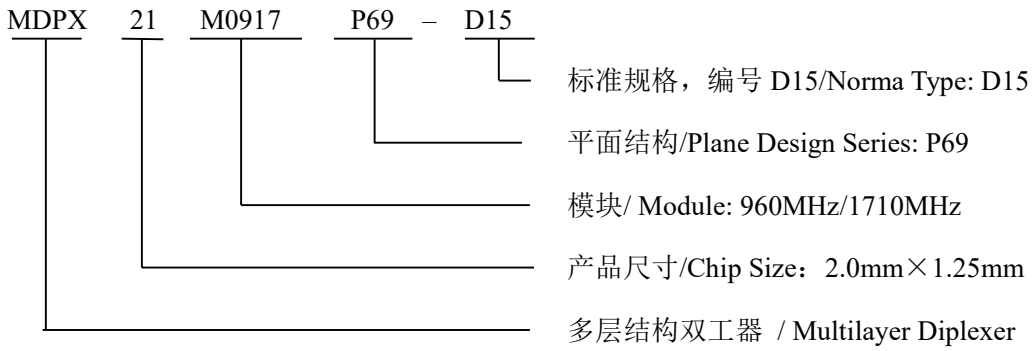

3 形状、尺寸和材料 Appearance, Dimensions and Material

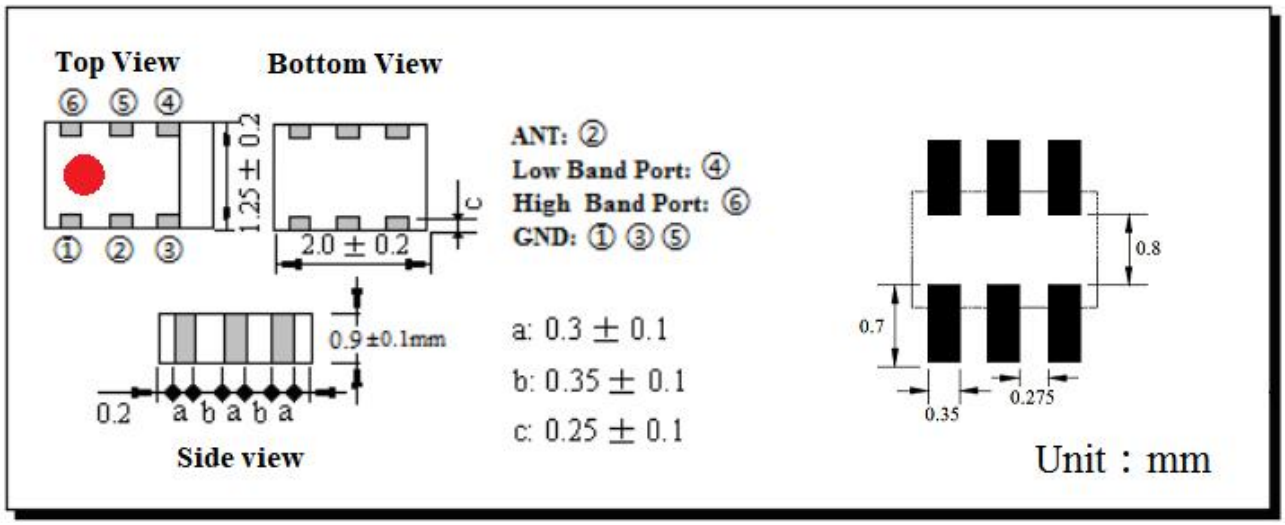

Part Name 名称	Structure and Material 结构及材料
Resonator 谐振体	Dielectric Material LTCC 介质材料
In/Output Terminals 输入/输出	Ag 银
Ground Base 接地面	Ag 银

4 测试条件 Testing Conditions

除非另有规定，否则在以下条件下测试 <Unless otherwise specified>

温度 Temperature : Ordinary Temperature (-40 to +85℃)

湿度 Humidity : Ordinary Humidity (25 to 85% RH)

大气压强 Atmospheric Pressure : 86 to 106 kPa

5 电气性能 Electrical Characteristics

操作温度范围 Operating Temperature Range : -40 to +85℃

保存温度范围 Storage Temperature Range : -40 to +85℃

No.	Item （项目）		Frequency（MHz）	Specifications （特性）
5.1	Insertion Loss （in f1） 插入衰耗		600~746 MHz	≤0.5dB@ (25℃±5℃) ≤0.6dB@ (-40℃~85℃)
			746~960 MHz	≤0.65dB @ (25℃±5℃) ≤0.75dB@ (-40℃~85℃)
5.2	Insertion Loss （in f2） 插入衰耗		1710~2700 MHz	≤0.5dB@ (25℃±5℃) ≤0.6dB@ (-40℃~85℃)
5.3	V.S.W.R (in BW) 驻波比（in f1 & f2）		600~960 MHz	≤2.0
			1710~2700 MHz	
5.4	Attenuation 阻带衰耗 （in f1）		1710~2170MHz 2170~2400MHz 2400~2700MHz	≥30dB ≥30dB ≥35dB
5.5	Attenuation 阻带衰耗 （in f2）		600~960MHz	≥25dB
5.6	Isolation 隔离度	LB to HB	1710~2700 MHz	≥30dB
		HB to LB	698~960 MHz	≥25dB
5.7	In/Output Impedance 输入/输出阻抗			50 Ω
5.8	功率容量 Power Capacity			3.0 W

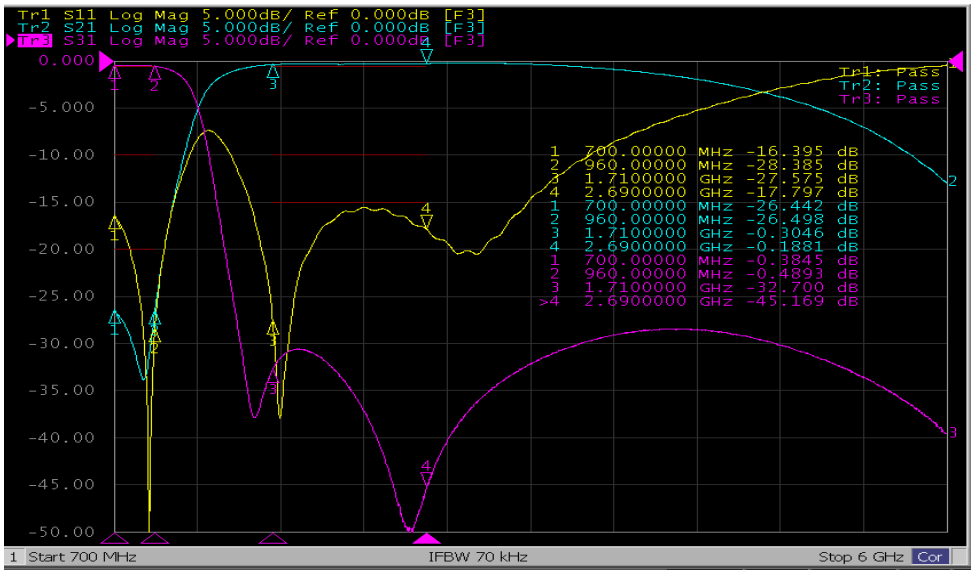

6 信赖性试验 Reliable Performance

NO.	Item	Specifications	Test Methods	
6-1	Solder-Ability 可焊性	More than 90% of termination should be covered with new solder. 端电极焊锡覆盖率为90%以上。	焊锡 Solder: Sn: Pb=	100:0
			焊锡温度 Temperature:	255℃+5℃/-0℃
			助焊剂 Flux: 松香 rosin	
			浸渍时间 Duration:	5±0.5s
6-2	Leaching Resistance 耐焊性	More than 75% of termination Should be covered with new solder. 端电极焊锡覆盖率为75%以上	焊锡 Solder: Sn: Pb=	100:0
			焊锡温度 Temperature:	270℃+2℃/-0℃
			助焊剂 Flux: 松香 rosin	
			浸渍时间 Duration:	10±0.5s
6-3	Terminal Strength 端头强度	The terminal and body should be no damage 端头和瓷体不应见损伤	The device should not be broken after tensile force of 1.0kg is slowly applied to pull a lead pin of the fixed device in the lead axis direction for 10±1 seconds. 在产品电极端子上或表面上应能承受 1kg 垂直拉力 10±1 秒	
6-4	Bending Strength 弯曲试验	No mechanical damage should be noticed 不应见机械损伤	Weld the product to the center p 1.6±0.2mm as the illustration arrow-ward on it at speed of: 1 position of 1.5mm bending dista product metal coating should not b 将产品按图焊在 1.6±0.2mm 的 PCB 板中间，由箭头方向施力 1mm/S，弯曲距离 1.5mm，保持 5±1S，产品金属层无脱落。	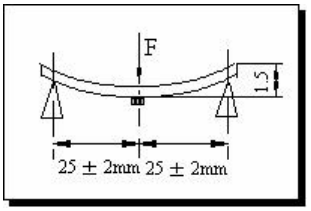

NO.	Item	Specifications	Test Methods
6-5	Drop 跌落	Post Environmental Tolerance (环境试验后允许附加误差) 1 Center Frequency 中心频率 fo： ±2.0 MHz； 2 Insertion Loss 插入衰耗： ±0.5 dB； 3 Band Width 通带宽度： ±1.0 MHz 4 Ripple (in BW) 通带波动： ±0.5 dB； 5 V.S.W.R (in BW) 驻波比： ±0.2 6 Attenuation 阻带衰耗： ±2.0 dB	Drop 10 times on a concrete floor from a height of 1m. 从距混凝土地面 1m 高度自由落下，重复 3 次。
6-6	Vibration 振动		频率 Frequency: 10 to 55Hz 振幅 Amplitude: 1.5mm 方向及时间 Direction and time: X, Y and Z directions for 2 hours each.
6-7	Humidity resistance 耐潮湿		a. 试验条件 Test condition 温度 Temp.: 60±2℃ 湿度 Humidity: 90%~95% 试验时间 Test time: 96±2 h b. 测量条件 Measurement method: 试验后常温常湿环境中放置（24±2）小时后测量。 The component should be stabilized at normal condition for (24±2) hours before test.
6-8	High temperature resistance 耐高温		a. 试验条件 Test condition 温度 Temp.: + 85±2℃ 试验时间 Test time: 96±2 h b. 测量条件 Measurement method: 试验后常温常湿环境中放置（24±2）小时后测量。 The component should be stabilized at normal condition for (24±2) hours before test.
6-9	Low temperature resistance 耐低温		a. 试验条件 Test condition 温度 Temp.: -40±2℃ 试验时间 Test time: 96±2 h b. 测量条件 Measurement method: 试验后常温常湿环境中放置（24±2）小时后测量。 The component should be stabilized at normal condition for (24±2) hours before test.
6-10	Thermal shock (Temperature cycle) 热冲击 （温度循环）		a. 试验条件 Test condition 1) 温度 Temp.: -40℃，时间 time: 30±3min 2) 温度 Temp.: +85℃，时间 time: 30±3min 5 cycles b. 测量条件 Measurement method: 试验后常温常湿环境中放置（24±2）小时后测量。 The component should be stabilized at normal condition for (24±2) hours before test.

7 焊接条件 Recommended Soldering Conditions

1、焊剂 Flux, Solder

① 使用松香助焊剂，禁止使用卤化物含量起过 0.2wt%的强酸性助焊剂。

Use rosin-based flux. Don't use highly acidic flux with halide content exceeding 0.2wt% (chlorine conversion value).

② 使用纯锡焊料 Use Sn solder.

2、回流焊条件 Reflow soldering conditions

●预热时，产品表温与焊料温度的温差最大不允许超出 150℃，焊接完后冷却时，产品表温与溶剂温度之间的温差最大不允许超出 100℃。预热不足有可能引发产品表面裂纹，导致产品品质下降。Pre-heating should be in such a way that the temperature difference between solder and product surface is limited to 150℃ max. Cooling into solvent after soldering also should be in such a way that temperature difference is limited to 100℃ max. Unwrought pre-heating may cause cracks on the product, resulting in the deterioration of products quality.

●标准回流焊曲线 Standard soldering profile.

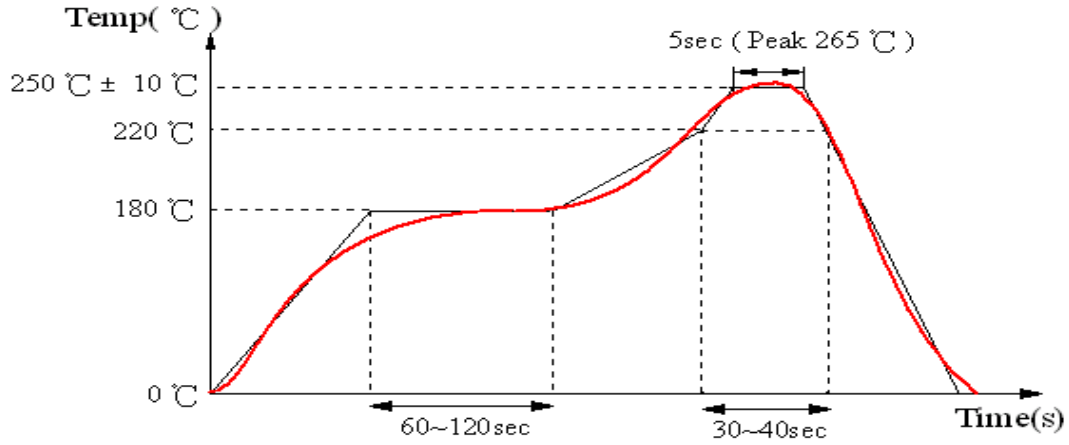

3、手工返工 Reworking with soldering iron

当使用电烙铁进行手工焊接时，以下条件必须严格遵守 The following conditions must be strictly followed when using a soldering iron.

预热 Pre-heating	150℃, 1 minute
尖端温度 Tip temperature	350℃ max
输出功率 Soldering iron output	80w max
电烙铁头尖端尺寸 End of soldering iron	φ3mm max
焊接时间 Soldering time	3 seconds max

8 包装 Packaging

① 编带尺寸 Dimensions of Tape:

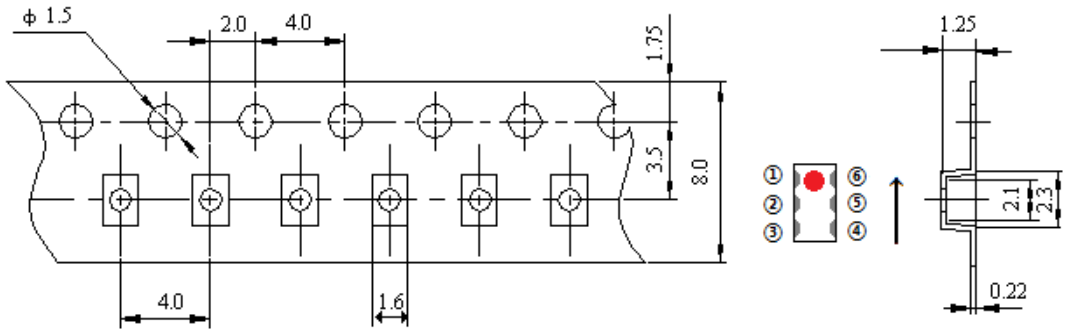

② 带轮尺寸 Dimensions of Reel

Unit: mm

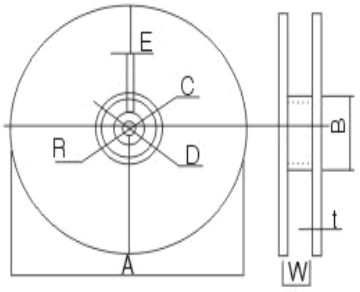

Reel material: PS (Polystyrene)

A	178±2
B	60±2
C	13.0±0.5
D	21.0±0.8
E	2.0±0.5
W	8.5±1.0
t	1.2±0.2
R	1.0±0.25

③ 编带抗拉强度 Pulling strength of tapes:

载带 Carrier tape	10N or more (1kgf or more)
上盖带 Cover tape	5N or more (1kgf or more)

④ 编带简图及拉伸方向 Taping figure and drawing direction:

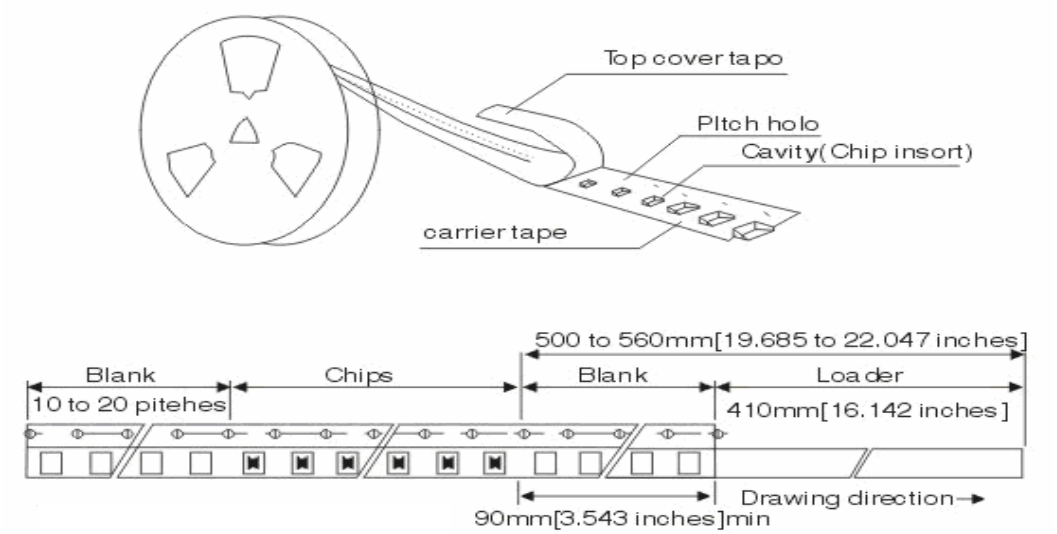

⑤ 盖带的剥离强度 Peeling strength of cover tape:

盖带 Cover tape	0.2~0.6N (20gf~60gf)

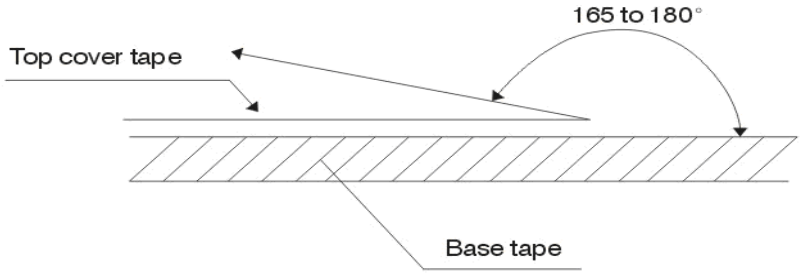

测试条件

1) 剥离角度 peel angle: 165°~180° vs. carrier tape.
2) 剥离速度 peel speed: 300mm/min±10%.

⑥ 包装数量 Packaging quantities: 3000 PCS / Reel

9 装箱清单及标志 Packing documents and marking

1. 包装文件 Packing documents

Packing includes the following:

a. 装箱清单 Packing list.

b. 合格证书 Certificate of compliance.

2. 盘上标记 Marking on reels:

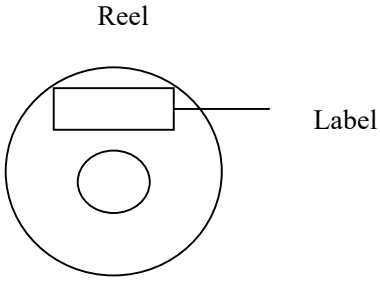

a 麦捷料号 MICROGATE Part No.

b 生产批号 Lot number

c 盘装数量 Quantity per reel

d 检验员号 Inspector No.

以上内容必须在标签上注明.All above shall be shown on marking label

麦捷公司标签如下所示：MICROGATE marking label will be as following:

MICROGATE

CUSTOMER:	P. O. NO	
CUSTOMER PART NO:	DATE CODE	LOT NO
MG PART NO:	QUANTITY	INSP. NO

MG PART NO

检验合格后，检验员在标签上盖上合格章。合格章如下所示：The eligible reels will be pressed a mark onto the surface. The mark will be as following:

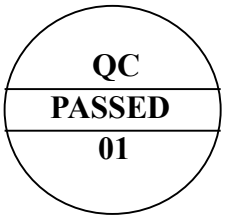

3. 内包装盒标记:Marking on inner box

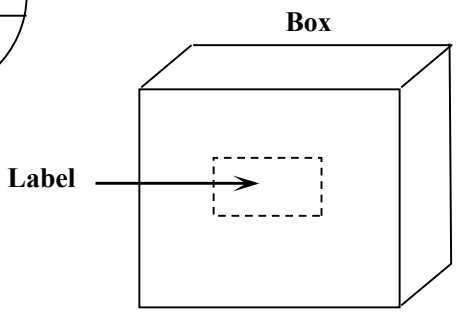

a. 型号 MICROGATE part No.

b. 每盒数量 Quantity per box

c. 包装日期 Date

以上内容必须在标签上注明（标签见 9.2 所示）。Above shall be shown on marking label (The marking label is shown in item 9.2).

4．外包装箱标记 Marking on outer case:

1) 制造商 Manufacturer: “MICROGATE” ①

“中国深圳制造” “Made in Shenzhen CHINA”②

2) 发运标记 Ship marking:

“向上” “UP”, “小心轻放”“HAND CARE”, “防潮”“MOISTURE-PROOF”.

3) 包装标签包括以下内容 Packing label include the following:

a. 型号 MICROGATE Part No

b. 总数量 Total quantity per case

c. 包装日期 Date;

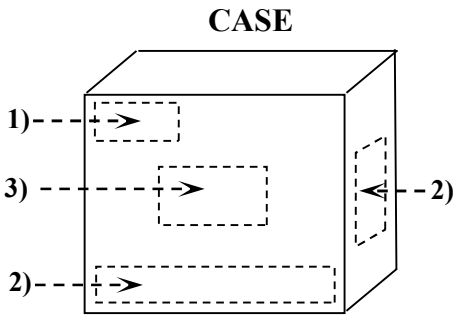

以上内容必须在标签上注明。(参见 9.2 所示)

All above shall be shown on marking label.

(The marking label is shown in item 9.2)

10 保管 Storage

①. 保管期限 Storage period

距麦捷出厂检验时间六个月内，产品可以使用；检验时间可以通过包装外侧标记的检验号确认；若时间超出六个月，应检查焊接性能后方可使用。Products which inspected in MICROGATE over 6 months ago should be examined and used, which can be confirmed with inspection No. marked on the container. Solder ability should be checked if this period is exceeded.

②. 保存条件 Storage conditions

●存放货物的库房应满足以下条件 Products should be storage in the warehouse on the following conditions

温度 Temperature: 10~40℃

湿度 Humidity : 30~70% relative humidity

不允许温、湿度有极剧变化。No rapid change on temperature and humidity

●禁止将产品保管在腐蚀性物质中，例如硫磺、氯气或者酸，否则将引起端头氧化，导致降低焊接性。Don't keep products in corrosive gases such as sulfur, chlorine gas or acid, or it may cause oxidization of electrode, resulting in poor solder ability.

●为了避免受潮气、灰尘等物质的影响，产品应保管于货架上。Products should be storage on the palette for the prevention of the influence from humidity, dust and so on.

●产品保管在库房中时，应避免热冲击，振动以及直接光照等等。Products should be storage in the warehouse without heat shock, vibration, and direct sunlight and so on.

●产品应密封包装 Products should be storage under the airtight packaged condition.