客户 CUSTOMER: 日期 DATE:

规格书
SPECIFICATION

产 品 名 称 PRODUCT NAME: Diplexer
贵 司 料 号 YOUR PART NO.:
敝 司 料 号 OUR PART NO.: MDPX21M0914P69-D46W
版 本 号 VERSION.: V1.1

接受 RECEPTION THE SPECIFICATION HAS BEEN ACCEPTED. 该规格书已被我司接受 日期: DATE： 公司： COMPANY：		
批准 CFMD	审核 CHKD	接收 RCVD

本规格书共 8 页

MANUFACTURING NAME

深圳市麦捷微电子科技股份有限公司
SHENZHEN MICROGATE TECHNOLOGY CO。，LTD
TEL：86-755-28085000
FAX：86-755-28085605

CFMD. 批准	CHKD. 审核	DSGD. 担当
梁启新	付迎华	曾艳峰

规格书改定履历 MODIFY HISTORY OF SPECIFICATION

Ver.	DATE	CONTENT	APPROVED
1.0	2020.09.13	初稿 Constitute	梁启新
1.1	2021.11.13	增加电性曲线 Add the Electrical Curve	付迎华

目录 CATALOG

1 适用范围 Scope 4
2 品名构成 Product Identification 4
3 形状、尺寸和材料 Appearance, Dimensions and Material 4
4 测试条件 Testing Conditions 5
5 电气性能 Electrical Characteristics 5
6 特性曲线 Characteristics Curve 6
8 包装 Packaging 8

1 适用范围 Scope

麦捷 Diplexer（MDPX 系列）产品设计用于 PHS、WLAN、GSM、Bluetooth、PDA 和无绳电话机中，具有低的插入损耗、高的衰减和小体积 SMD 片式设计，能减少复杂的调校工作，可以简化电路设计。

"Microgate" Microwave Diplexer series are designed to be used in PHS, WLAN, GSM, Bluetooth, PDA & Cordless phones with low insertion loss and high attenuation as well as small size SMD chip design, which can simplify your complex tuning and circuit design.

2 品名构成 Product Identification

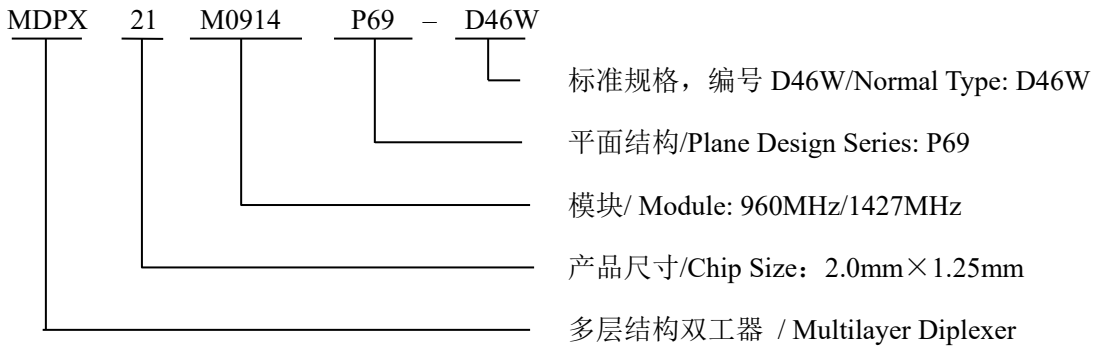

3 形状、尺寸和材料 Appearance, Dimensions and Material

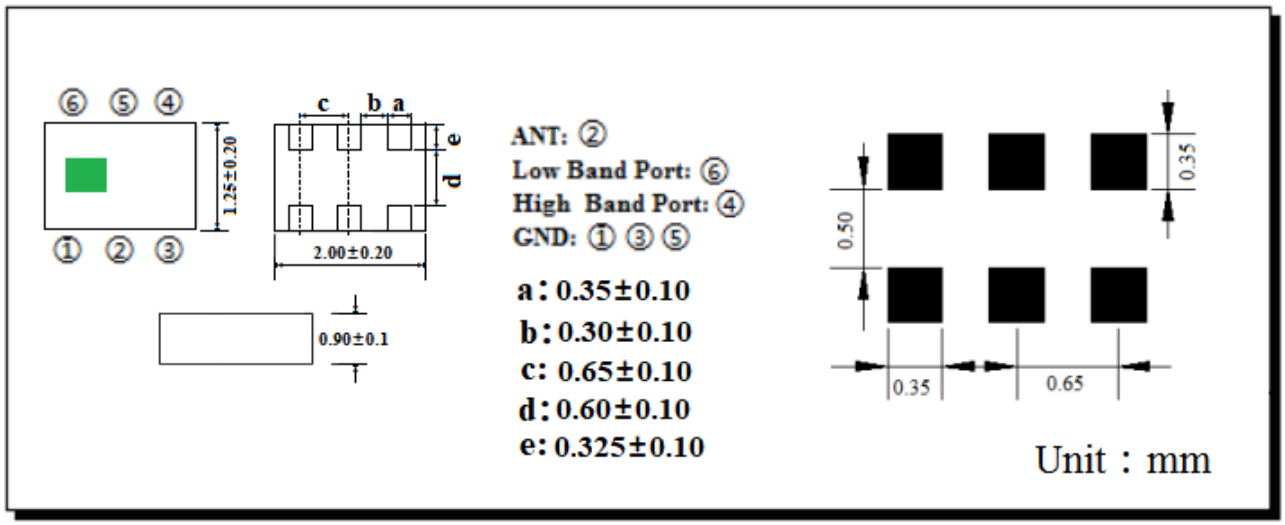

Part Name 名称	Structure and Material 结构及材料
Resonator 谐振体	Dielectric Material LTCC 介质材料
In/Output Terminals 输入/输出	Ag 银
Ground Base 接地面	Ag 银

4 测试条件 Testing Conditions

除非另有规定，否则在以下条件下测试 <Unless otherwise specified>

温度 Temperature : Ordinary Temperature (-40 to +85℃)

湿度 Humidity : Ordinary Humidity (25 to 85% RH)

大气压强 Atmospheric Pressure : 86 to 106 kPa

5 电气性能 Electrical Characteristics

操作温度范围 Operating Temperature Range : -40 to +85℃

保存温度范围 Storage Temperature Range : -40 to +85℃

Item （项目）		Unit (单位)	Spec Requirement （规格）			Notes
			Min.	Typ.	Max.	
Frequency range		MHz	699		960	
Insertion loss f1	699~880 MHz	dB		0.40	0.45	RT(25°C)
	880~915MHz	dB		0.40	0.50	
	925~960MHz	dB		0.50	0.60	
	698~880 MHz	dB			0.55	-40~85°C
	880~915MHz	dB			0.60	
	925~960MHz	dB			0.70	
Return loss f1（In/Out）	699~960 MHz	dB	15	22		
Attenuation	1398~1427 MHz	dB	5	23		
	1427~1920 MHz	dB	23	26		
	1920 ~2690 MHz	dB	25	28		
	2690 ~4194 MHz	dB	5	19		
	4194 ~5760 MHz	dB	5	19		
	5150 ~5850 MHz	dB	15	21		
	5760 ~ 12750 MHz	dB5	5	22		
Insertion loss f2	1427~1511 MHz	dB		0.50	0.60	RT(25°C)
	1710~2170 MHz	dB		0.30	0.40	
	2300~2690 MHz	dB		0.35	0.50	
	1427~1511 MHz	dB			0.70	-40~85°C
	1710~2170 MHz	dB			0.50	
	2300~2690 MHz	dB			0.60	
Return loss f2（In/Out）	1427~2690 MHz	dB	12	16		
Attenuation	300~960 MHz	dB	15	18		
	3600~3840 MHz	dB	10	16		
	3840~5150 MHz	dB	5	9		
	5150~5850 MHz	dB	5	9		
	5850~7600 MHz	dB	0.5	10		
	8500~12750 MHz	dB	0.5	1		
Isolation	698~960 MHz	dB	18	20		
	1427~1511 MHz	dB	23	27		
	1710~1910 MHz	dB	23	26		
	1910~2690 MHz	dB	25	28		
Input port impedance		Ohm		50		
Output port impedance		Ohm		50		
Power Capacity		W	4.0 Max.			

6 特性曲线 Characteristics Curve

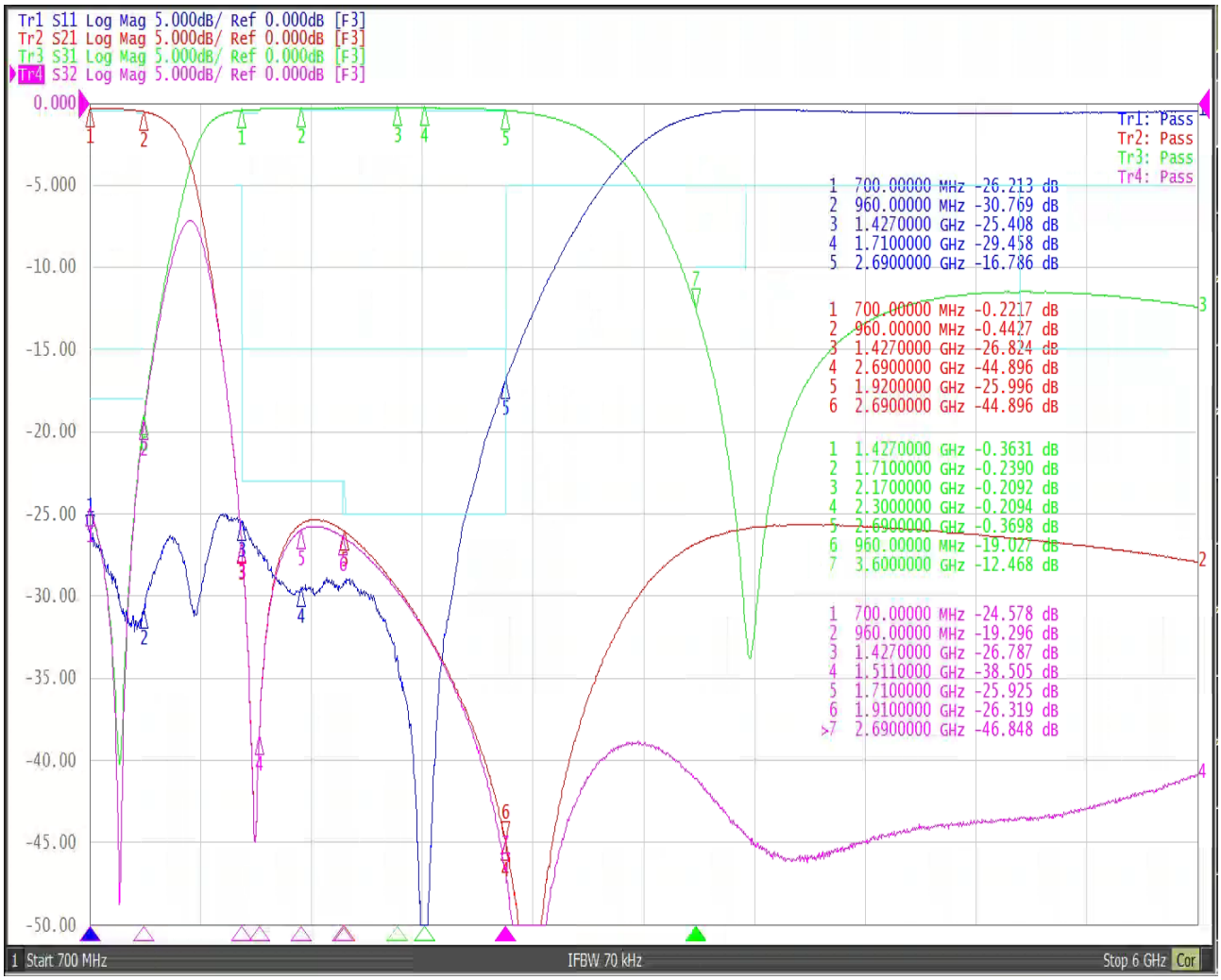

7 焊接条件 Recommended Soldering Conditions

1、焊剂 Flux, Solder

① 使用松香助焊剂，禁止使用卤化物含量起过 0.2wt%的强酸性助焊剂。

Use rosin-based flux. Don't use highly acidic flux with halide content exceeding 0.2wt% (chlorine conversion value).

② 使用纯锡焊料 Use Sn solder.

2、回流焊条件 Reflow soldering conditions

●预热时，产品表温与焊料温度的温差最大不允许超出 150℃，焊接完后冷却时，产品表温与溶剂温度之间的温差最大不允许超出 100℃。预热不足有可能引发产品表面裂纹，导致产品品质下降。Pre-heating should be in such a way that the temperature difference between solder and product surface is limited to 150℃ max. Cooling into solvent after soldering also should be in such a way that temperature difference is limited to 100℃ max. Unwrought pre-heating may cause cracks on the product, resulting in the deterioration of products quality.

●标准回流焊曲线 Standard soldering profile.

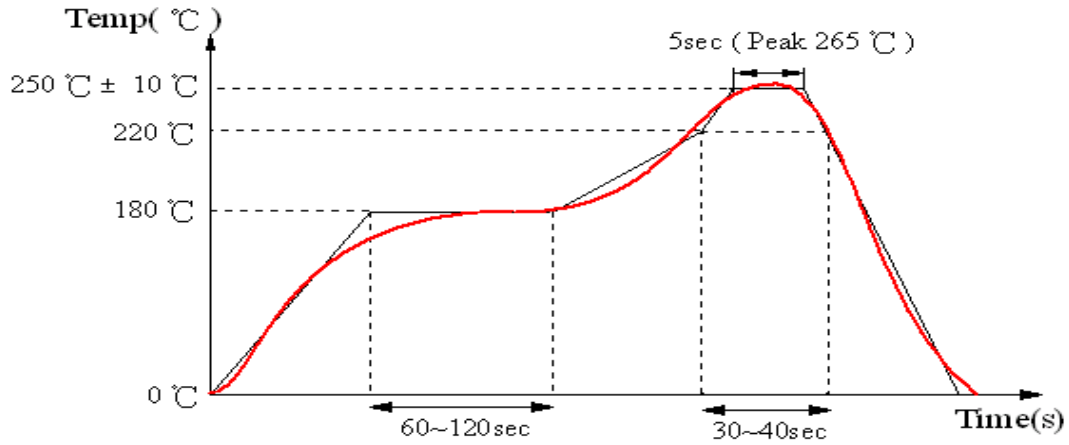

3、手工返工 Reworking with soldering iron

当使用电烙铁进行手工焊接时，以下条件必须严格遵守 The following conditions must be strictly followed when using a soldering iron.

预热 Pre-heating	150℃, 1 minute
尖端温度 Tip temperature	350℃ max
输出功率 Soldering iron output	80w max
电烙铁头尖端尺寸 End of soldering iron	φ3mm max
焊接时间 Soldering time	3 seconds max

8 包装 Packaging

①编带尺寸 Dimensions of Tape:

Unit: mm

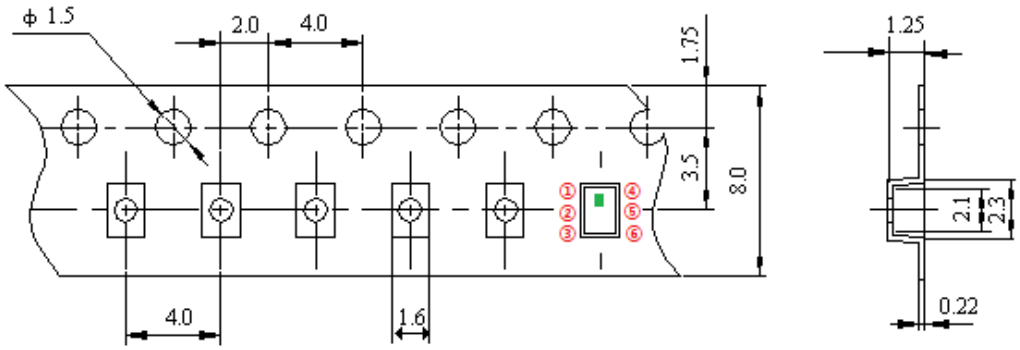

②带轮尺寸 Dimensions of Reel

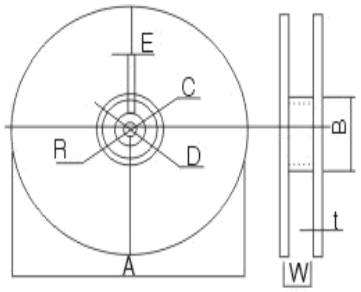

Reel material: PS (Polystyrene)

A	178±2
B	60±2
C	13.0±0.5
D	21.0±0.8
E	2.0±0.5
W	8.5±1.0
t	1.2±0.2
R	1.0±0.25

③编带抗拉强度 Pulling strength of tapes:

载带 Carrier tape	10N or more (1kgf or more)
上盖带 Cover tape	5N or more (1kgf or more)

④编带简图及拉伸方向 Taping figure and drawing direction:

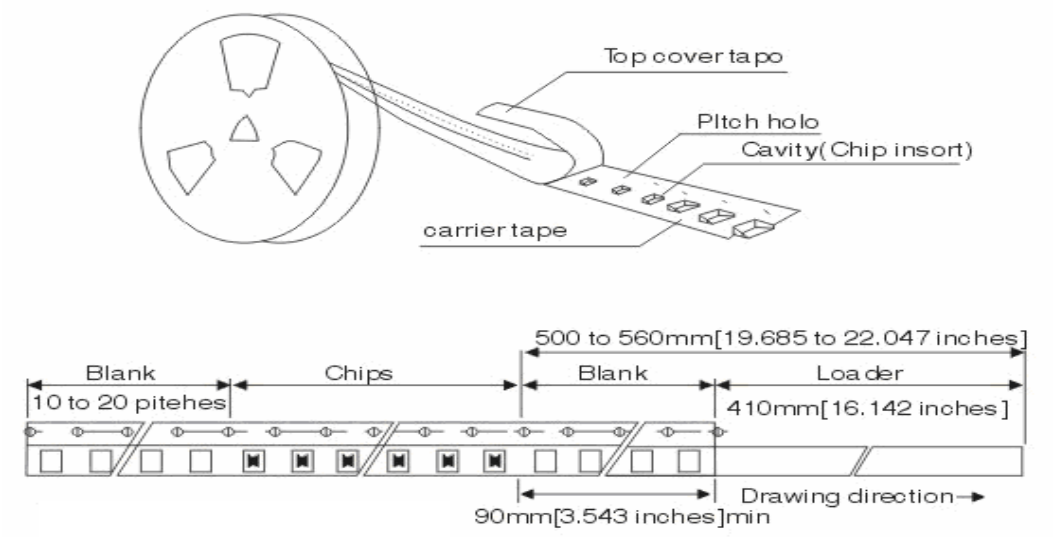

⑤盖带的剥离强度 Peeling strength of cover tape:

盖带 Cover tape	0.2~0.6N (20gf~60gf)

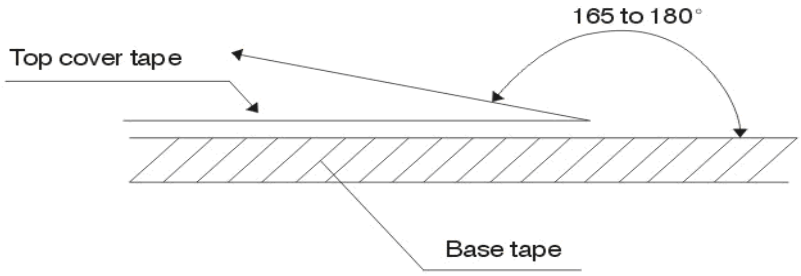

测试条件

1) 剥离角度 peel angle: 165°~180° vs. carrier tape.
2) 剥离速度 peel speed: 300mm/min±10%.

⑥ 包装数量 Packaging quantities: 3000 PCS / Reel