客户 CUSTOMER: 日期 DATE:

规格书
SPECIFICATION

产 品 名 称 PRODUCT NAME: Diplexer	
贵 司 料 号 YOUR PART NO.:	
敝 司 料 号 OUR PART NO.:	MDPX18M2461P69-D41EX
版 本 号 VERSION.:	V2.1

接受 RECEPTION THE SPECIFICATION HAS BEEN ACCEPTED. 该规格书已被我司接受 日期: DATE： 公司： COMPANY：		
批准 CFMD	审核 CHKD	接收 RCVD

本规格书共 11 页

MANUFACTURING NAME

深圳市麦捷微电子科技股份有限公司
SHENZHEN MICROGATE TECHNOLOGY CO。，LTD
TEL：86-755-28085000
FAX：86-755-28085605

CFMD. 批准	CHKD. 审核	DSGD. 担当
梁启新	付迎华	曾艳峰

规格书改定履历 MODIFY HISTORY OF SPECIFICATION

Ver.	DATE	CONTENT	APPROVED
1.0	2020.06.16	初稿 Constitute	梁启新
1.1	2020.08.27	更新规格 Modify Electrical Characteristics	付迎华
2.0	2021.02.27	1、2400-2500MHz 插损由 0.5dB 升级为 0.7dB 驻波由 1.22 更改为 1.5; 2、5150-5330MHz 插损由 0.9dB 升级为 1.2dB; 3、5330-7130MHz 插损由 0.8dB 升级为 1.1dB; 4、5150-7130MHz 驻波由 1.43 升级为 1.58； 5、10300-14250MHz 抑制由 25dB 升级为 23dB； 6、15450-21375MHz 抑制由 20dB 升级为 18dB；	付迎华
2.1	2024.09.05	增加典型值 Add the typical value	付迎华

目录 CATALOG

1 适用范围 Scope 4
2 品名构成 Product Identification 4
3 形状、尺寸和材料 Appearance, Dimensions and Material 4
4 测试条件 Testing Conditions 5
5 电气性能 Electrical Characteristics 5
6 特性曲线 Characteristics Cuvre 7
7 焊接条件 Recommended Soldering Conditions 8
8 包装 Packaging 9

1 适用范围 Scope

麦捷 Diplexer（MDPX 系列）产品设计用于 5G、LTE、WIFI、Bluetooth、PDA 和无绳电话机中，具有低的插入损耗、高的衰减和小体积 SMD 片式设计，能减少复杂的调校工作，可以简化电路设计。

"Microgate" Microwave Diplexer series are designed to be used in 5G、LTE、WIFI、Bluetooth、PDA & Cordless phones with low insertion loss and high attenuation as well as small size SMD chip design, which can simplify your complex tuning and circuit design.

2 品名构成 Product Identification

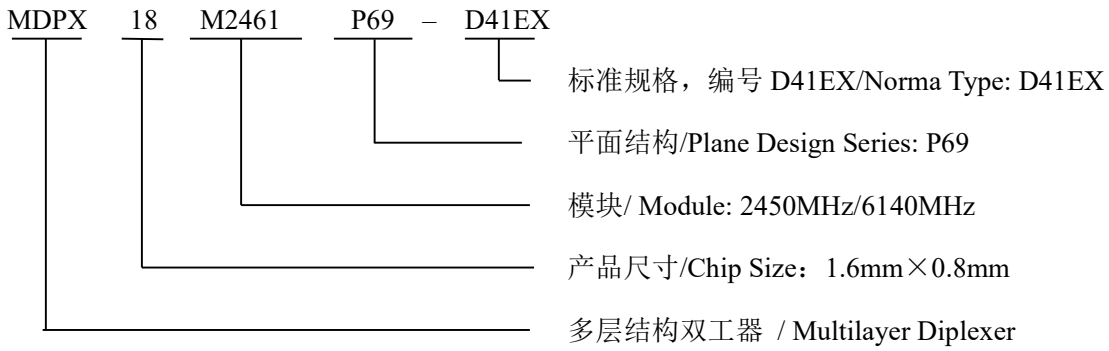

3 形状、尺寸和材料 Appearance, Dimensions and Material

Unit:mm

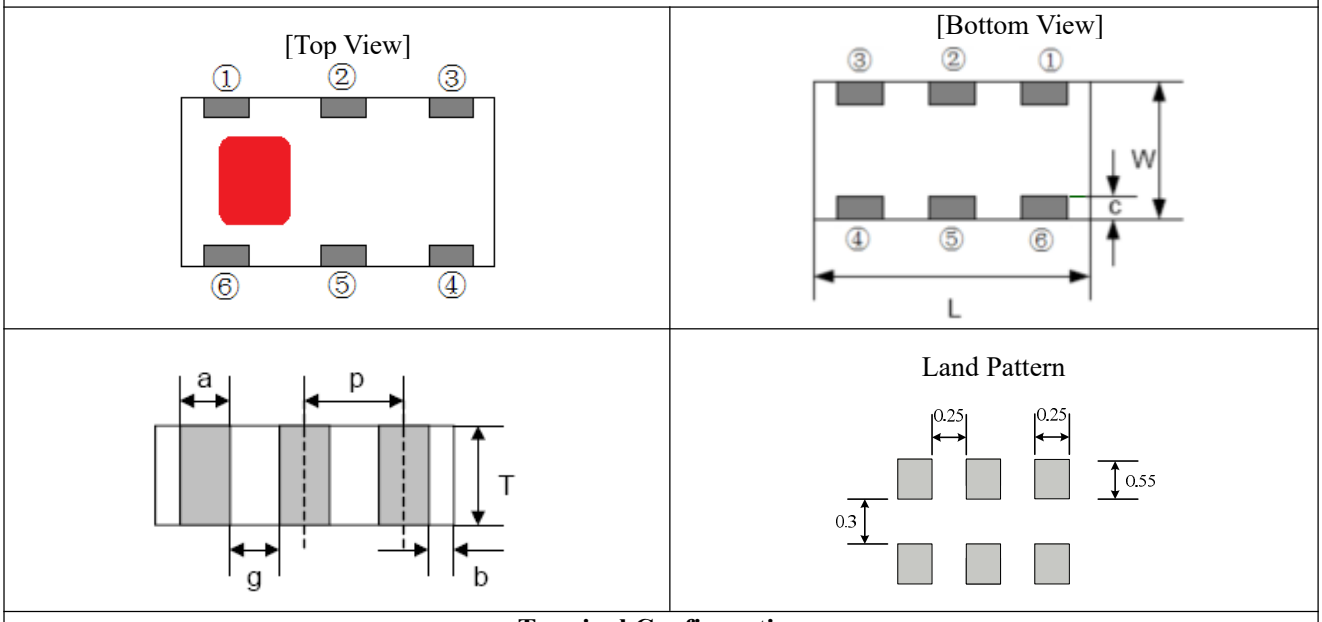

Terminal Configuration			
①	**GND**	④	**Low band**
②	**Common port**	⑤	**GND**
③	**GND**	⑥	**High band**

Symbols	L	W	T	a	b	c	g	p
Dimensions	1.6±0.1	0.8±0.1	0.70 Max.	0.25±0.1	0.175±0.10	0.15±0.1	0.25±0.1	0.5±0.1

Part Name 名称	Structure and Material 结构及材料
Resonator 谐振体	Dielectric Material LTCC 介质材料
In/Output Terminals 输入/输出	Ag 银\Ni 镍\Sn 锡
Ground Base 接地面	Ag 银\Ni 镍\Sn 锡

4 测试条件 Testing Conditions

除非另有规定，否则在以下条件下测试 <Unless otherwise specified>

温度 Temperature : Ordinary Temperature (-40 to +85℃)

湿度 Humidity : Ordinary Humidity (25 to 85% RH)

大气压强 Atmospheric Pressure : 86 to 106 kPa

5 电气性能 Electrical Characteristics

操作温度范围 Operating Temperature Range : -40 to +85℃

保存温度范围 Storage Temperature Range : -40 to +85℃

规格参数 Parameters	单位 Unit	规格		
		下限值 Min.	典型值 Typ.	上限值 Max.
★Low Band 中心频率 Low Band-Center Frequency	MHz	/	2450	/
★Low Band 通带宽度 Low Band-Bandwidth	MHz	/	100	/
★Low Band 插入损耗 Low Band-Insertion Loss	dB	/	0.27	0.7
★Low Band 带外抑制度 Low Band-Rejection @ 4800~5000MHz	dB	25	26.8	/
★Low Band 带外抑制度 Low Band-Rejection @ 5150~7125MHz	dB	25	30.3	/
★Low Band 带外抑制度 Low Band-Rejection @ 7200~7500MHz	dB	25	45.4	/
★Low Band 端口驻波 Low Band-Port SWR	:1	/	1.15	1.5
★Low Band 端口最大输入功率 Low Band-Max. Input Power	dBm	/	/	33

★High Band 中心频率 High Band-Center frequency		MHz	/	6140	/
★High Band 通带宽度 High Band-Bandwidth		MHz	/	1980	/
★High Band 插入损耗 High Band- Insertion Loss	dB@5150-5330MHz	dB	/	0.80	1.2
	dB@5330-7130MHz	dB		0.74	1.1
★High Band 带外抑制度 High Band-Rejection @2400~2500MHz		dB	25	29.6	/
★High Band 带外抑制度 High Band-Rejection @2515~3600MHz		dB	22	23.0	/
★High Band 带外抑制度 High Band-Rejection @3800~4200MHz		dB	5	10.4	/
★High Band 带外抑制度 High Band-Rejection @10300~14250MHz		dB	23	27.7	/
★High Band 带外抑制度 High Band-Rejection @15450~21375MHz		dB	18	22.3	/
★High Band 端口驻波 High Band-Port SWR		:1	/	1.31	1.58
★High Band 端口最大输入功率 High Band-Max. Input Power		dBm	/	/	33
Low Band 端口与 High Band 端口 相互抑制度 Low Band-High Band-Rejection @2400~2500MHz		dB	25	30.2	/
Low Band 端口与 High Band 端口 相互抑制度 Low Band-High Band-Rejection @5150~7125MHz		dB	25	30.3	/
Low Band 端输入阻抗 Low Band-Input Impedance		ohm	50		
High Band 端输出阻抗 High Band-Output Impedance		ohm	50		
Common 端阻抗 Ant Impedance		ohm	50		
潮湿敏感等级 MSL, Moisture Sensitive Level			MSL1		

6 特性曲线 Characteristics Curve

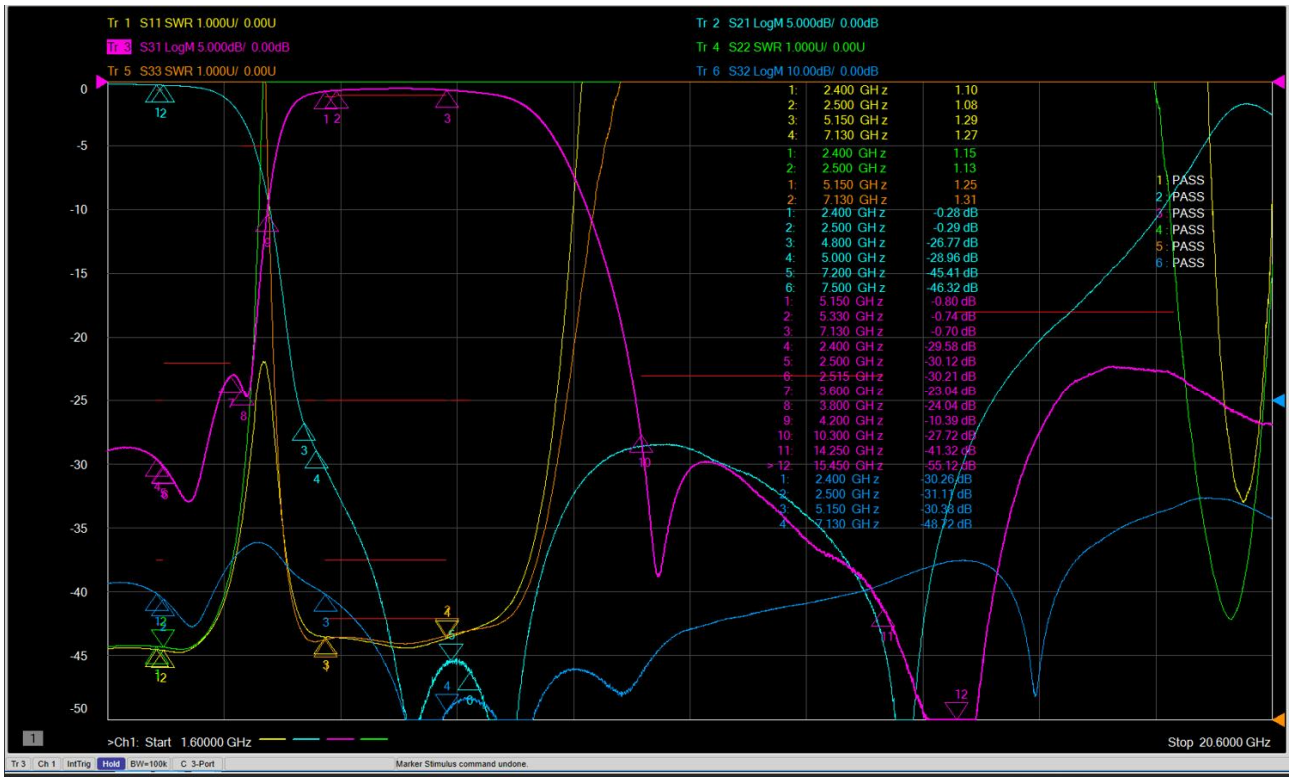

7 焊接条件 Recommended Soldering Conditions

1、焊剂 Flux, Solder

① 使用松香助焊剂，禁止使用卤化物含量起过 0.2wt%的强酸性助焊剂。

Use rosin-based flux. Don't use highly acidic flux with halide content exceeding 0.2wt% (chlorine conversion value).

② 使用纯锡焊料 Use Sn solder.

2、回流焊条件 Reflow soldering conditions

●预热时，产品表温与焊料温度的温差最大不允许超出 150℃，焊接完后冷却时，产品表温与溶剂温度之间的温差最大不允许超出 100℃。预热不足有可能引发产品表面裂纹，导致产品品质下降。

Pre-heating should be in such a way that the temperature difference between solder and product surface is limited to 150℃ max. Cooling into solvent after soldering also should be in such a way that temperature difference is limited to 100℃ max. Unwrought pre-heating may cause cracks on the product, resulting in the deterioration of products quality.

●标准回流焊曲线 Standard soldering profile.

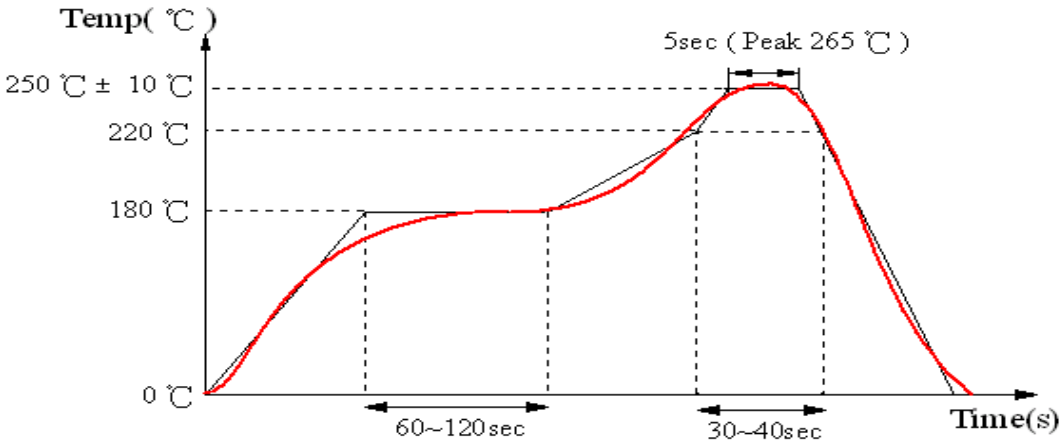

3、手工返工 Reworking with soldering iron

当使用电烙铁进行手工焊接时，以下条件必须严格遵守 The following conditions must be strictly followed when using a soldering iron.

预热 Pre-heating	150℃, 1 minute
尖端温度 Tip temperature	350℃ max
输出功率 Soldering iron output	80w max
电烙铁头尖端尺寸 End of soldering iron	φ3mm max
焊接时间 Soldering time	3 seconds max

8 包装 Packaging

①编带尺寸 Dimensions of Tape:

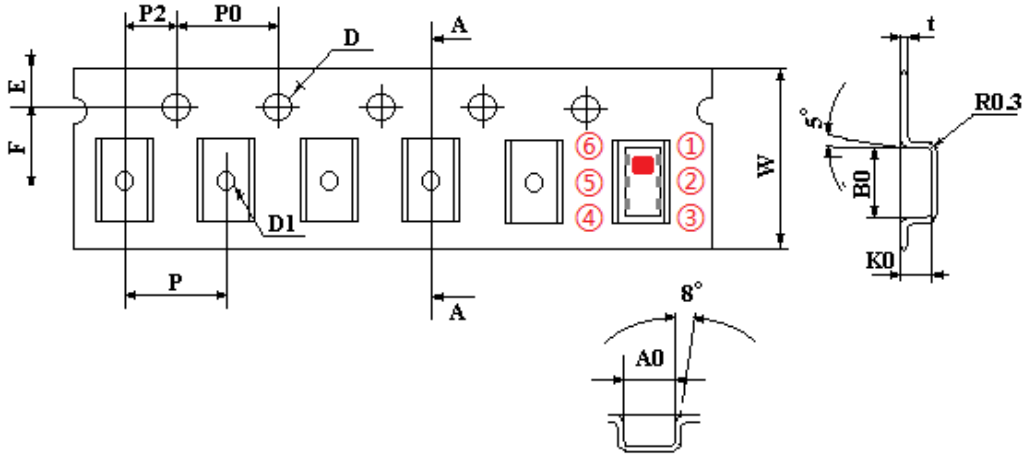

W	P	E	F	P2	D	D1
8.00+0.30/-0.10	4.00±0.10	1.75±0.10	3.50±0.05	2.00±0.05	1.50+0.10/-0.00	0.70+0.25/-0.10
P0	10P0	A0	B0	K0	T	Tape Material
4.00±0.10	40.00±0.20	0.95±0.10	1.82±0.10	0.75±0.10	0.22±0.05	塑带 plastic carrier tape

Unit: mm

②带轮尺寸 Dimensions of Reel

Unit: mm

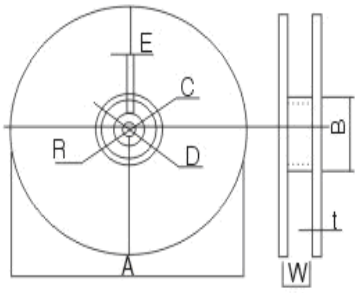

Reel material: PS (Polystyrene)

A	178±2
B	60±2
C	13.0±0.5
D	21.0±0.8
E	2.0±0.5
W	8.5±1.0
t	1.2±0.2
R	1.0±0.25

③编带抗拉强度 Pulling strength of tapes:

载带 Carrier tape	10N or more (1kgf or more)
上盖带 Cover tape	5N or more (1kgf or more)

④编带简图及拉伸方向 Taping figure and drawing direction:

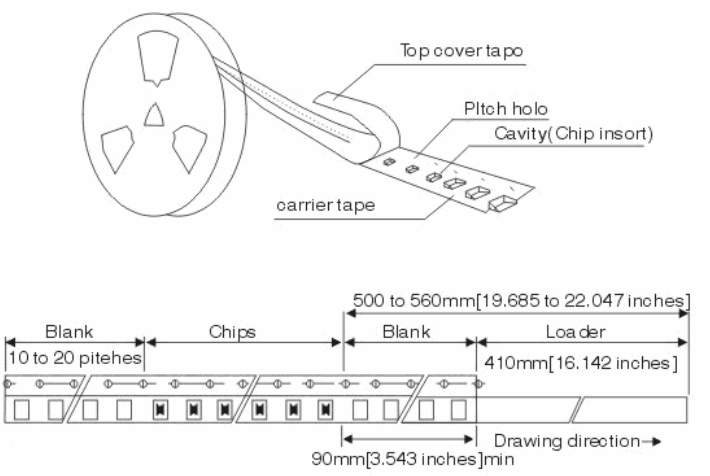

编带材料 Tape material:

基带 Base tape: 塑带 plastic carrier tape

盖带 Cover tape: 聚乙烯 polyethylene

⑤盖带的剥离强度 Peeling strength of cover tape:

盖带 Cover tape	0.2~0.6N (20gf~60gf)

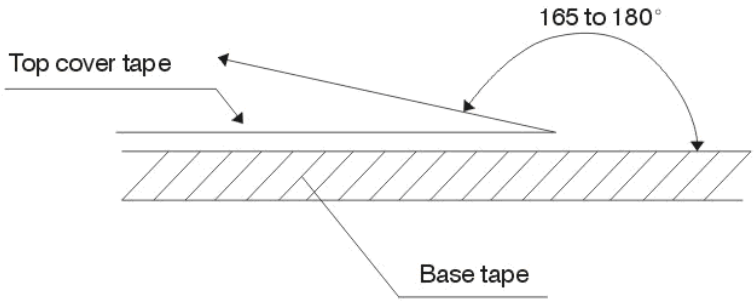

测试条件 Test condition:

1) 剥离角度 peel angle: 165°~180° vs. carrier tape.
2) 剥离速度 peel speed: 300mm/min±10%.

⑥包装数量 Packaging quantities: 4000 PCS / Reel