APPROVAL SPECIFICATION

RoHS+HSF
COMPLIANT

PRODUCT NAME: SMD power inductor

YOUR PART NO.:

OUR PART NO.: MAPM1007/08 Series

VERSION: V2.0

RECEPTION **THE SPECIFICATION HAS BEEN ACCEPTED.** **COMPANY:** **DATE:**		
CFMD	**CHKD**	**RCVD**

Confidential for Microgate

MANUFACTURING NAME

SHENZHEN MICROGATE TECHNOLOGY CO.，LTD
Address: Microgate Technology Building, No. 16, Technology Road, Pingshan, Shenzhen, China.
Postcode: 518118
Tel: 86-755-28085000

CFMD.	CHKD.	DSGD.
Charles	Lu Denghui	Wang Yusheng

CATALOG

	Component SPEC Version Record……	**3**
1	**Scope……**	**4**
2	**Product Identification……**	**4**
3	**Appearance, Dimensions and Material……**	**4**
4	**Testing Conditions……**	**5**
5	**Electrical Characteristics……**	**5-6**
6	**Reliability……**	**7-9**
7	**Recommended Soldering Conditions……**	**9**
8	**Packaging……**	**10-11**
9	**Products Storage……**	**11**
10	**Environment……...**	**11**

Confidential for Microgate

Component SPEC Version Record

Rev.	Effective Date	Changed Contents	Change Reasons	Approved By
1.0	2015.06.18	New released	/	Charles
2.0	2026.01.08	Update specifications	/	Charles

Confidential for Microgate

1. Scope

This specification applies to the MAPM100740D series of SMD Power inductors.

2. Product Identification

MAPM 100740 D- R15 M **－LF
① ② ③ ④ ⑤ ⑥ ⑦

① Product Symbol
② Dimensions
③ Special process code
④ Inductance Value (R15:0.15uH 3R3:3.3uH 100: 10uH;)
⑤ Inductance Tolerance (K:10% ; M:20% ; N:30%)
⑥ Process code
⑦ Lead-Free

3. Appearance, Dimensions and Material

(1) Shape and dimensions

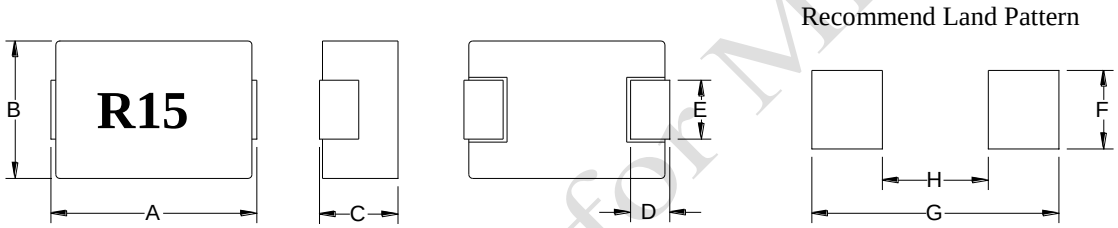

MAPM1007**Series

Dimensions in mm						
A	B	D	E	F	G	H
11.0±0.5	7.2±0.3	2.5±0.5	3.0±0.5	4.1 ref	13.6 ref	5.4 ref

Series	C
MPAM100720	2.0max.
MPAM100730	3.0max.
MPAM100740	4.0max.
MPAM100744	4.4max.

MAPM100840 Series

Dimensions in mm							
A	B	C	D	E	F	G	H
10.1±0.5	7.8±0.3	4.0max.	2.5±0.5	3.0±0.5	4.1 ref	13.6 ref	5.4 ref

(2) Material List

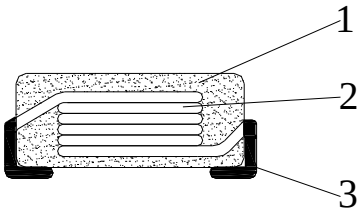

No.	Item	Material
1	Core	Alloy Material
2	Wire	Enameled Copper Wire
3	Terminal	Tin Covered Copper

Confidential for Microgate

4. Testing Conditions

Unless otherwise specified, the standard conditions for measurement/test as:
Ambient Temperature : 5 to 35℃
Relative Humidity: 25 to 85% RH
Atmospheric Pressure: 86 to 106 kPa

If any doubt on the results, measurements/tests should be made within the following limits:
Ambient Temperature : 25±1℃
Relative Humidity: 60 to 70% RH
Atmospheric Pressure: 86 to 106 kPa

5. Electrical Characteristics And Test Instruments

Part No.	Inductance L0 (uH)	DCR(mΩ)		Isat (A)		Irms (A)	
	±20%	Max.	Typ.	Max.	Typ.	Max.	Typ.
MAPM100720D-R15L**-LF	0.15±15%	1.14±5%		65	70	31	33
MAPM100730D-R15M**-LF	0.15±20%	0.72	0.65	75	80	40	43
MAPM100730D-R22M**-LF	0.22±20%	0.76	0.7	60	65	38	40
MAPM100740D-R15L**-LF	0.15±15%	0.5	0.43	75	78	43	48
MAPM100740D-R22L**-LF	0.22±15%	0.6±5%		67	73	40	43
MAPM100744D-R10M**-LF	0.10±20%	0.42	0.38	100	105	55	58
MAPM100840D-R18K**-LF	0.18±10%	0.55±10%		40.0	44.0	38.0	40.0

Test instruments and remarks

* All test data is referenced to 25℃ ambient.
* Test Condition: 100KHz,1.0Vrms.
* L test by CHROMA 3302 meter or equivalent
* DCR test by Tonghui TH2516B meter or equivalent
* CHROMA 3302 and 1320 meter for IDC;
* Irms: DC current (A) that will cause an approximate ΔT of 40℃.
* Isat: DC current (A) that will cause L0 to drop approximately 30%.
* The rated current as listed is either the saturation current or the heating current depending on which value is lower.
* Operating temperature: -55℃ to +125℃.(Including self-heating).
* The part temperature (ambient + temp rise) should not exceed 125℃ under worse case operating conditions. Circuit design, component placement, PCB trace size and thickness, airflow and other cooling provision all affect the part temperature. Part temperature should be verified in the end application.

Confidential to Microgate

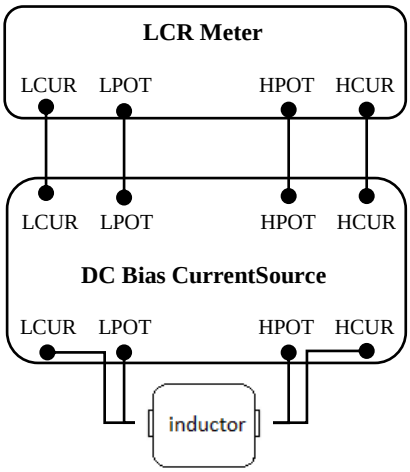

Isat test schematic diagram

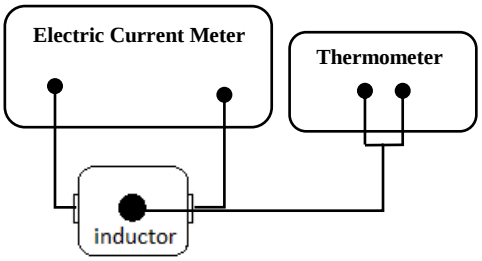

Irms test schematic diagram

DCR Measure point

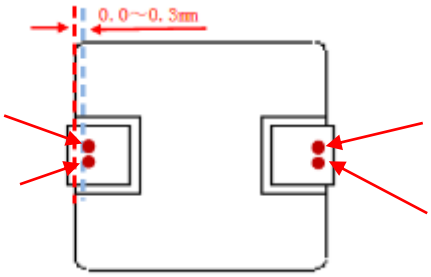

Please measure DCR by using the four-point testing method

Confidential for Microgate

6. Reliability

No.	Item	Requirements	Test Methods and Remarks	Reference	Sample Size
1	Solderability	Terminal area must have 95% min. solder coverage.	①Temperature:245± 5℃, flux 5-10 s. ②Sample immersion tin furnace 5 ±0.5s. ③Immersed and in and out of speed: 25 ± 6mm/s.	AEC-Q200 (J-STD-002)	15
2	Resistance to Soldering Heat	(1) No physical damage. (2)｜ΔL0/L0｜≤10%	①The peak temperature: 260+5/-0℃. ②Reflow:3times. ③Temperature curve is as below: 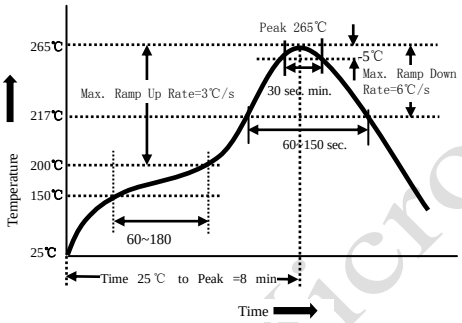	AEC-Q200 (MIL-STD-202 Method 210)	30
3	High Temperature Storage		①Temperature: 155±2℃. ②Time : 1000 hours. ③Measurement at 24±4 hours after test conclusion. 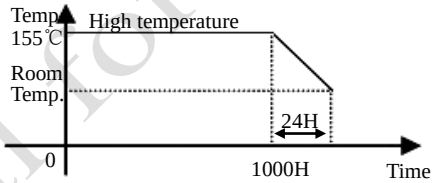	AEC-Q200 (MIL-STD -202 Method 108)	77
4	Low Temperature Storage		①Temperature: -55±2℃. ②Time : 1000 hours. ③Measurement at 24±4 hours after test conclusion. 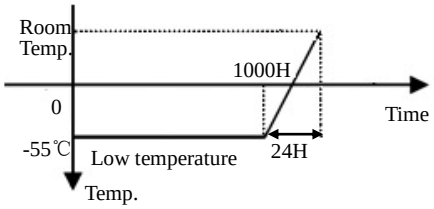	JESD22-A119	77
5	Thermal shock		①First -40℃ for 30 minutes, last 125℃ 30 minutes as 1 cycle. Go through 1000 cycles. ②Max transfer time is 20 second. ③Measurement at 24±4 hours after test conclusion. 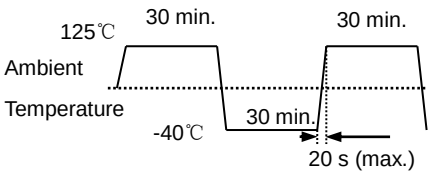	MIL-STD -202 Method 107	30

Confidential for Microgate

No.	Item	Requirements	Test Methods and Remarks	Reference	Sample Size
6	Humidity Resistance	(1) No physical damage. (2)｜ΔL0/L0｜≤10%	①1000 hours, 85°C/85%RH. ②Unpowered. ③Measurement at 24±4 hours after test conclusion. 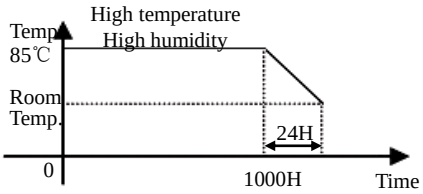	AEC-Q200 (MIL-STD -202 Method 103)	77
7	Terminal Strength	No physical damage.	①The test samples shall be soldered to the board. ②17.7N, 60s. 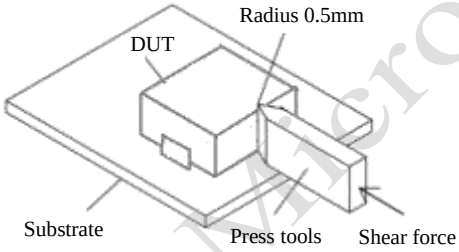	AEC-Q200 (AEC-Q200-006)	30
8	Board Flex	(1) No physical damage. (2)｜ΔL0/L0｜≤10%	①Part mounted on a 100mm*40mm FR4 PCB board, which is 1.6±0.2 mm thick . ②Bending speed is 1mm/s. ③Keeping the P.C Board 2 mm minimum for 60 seconds. 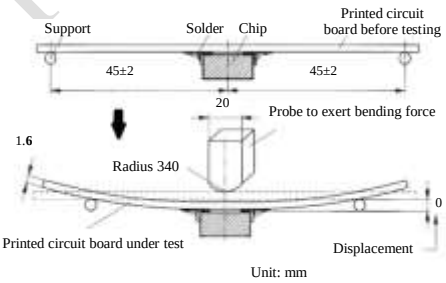	AEC-Q200 (AEC-Q200-005)	30
9	Drop		Height: 1 m, Free fall, 10times.	JESD22-B111	30
10	Vibration		①Frequency range : 10~2000Hz. ②Amplitude: 1.5mm, 10g. ③Sweep time and duration: 10~2000~10Hz for 20 minutes. ④Each four hours in X,Y,Z direction, 12 hours in total.	AEC-Q200 (MIL-STD-202 Method 204)	30

Confidential for Microgate

No.	Item	Requirements	Test Methods and Remarks	Reference	Sample Size
11	Loading at High Temperature	(1) No physical damage. (2) | ΔL0/L0 | ≤10%	①Temperature: 105±2℃. ②Time : 1000 hours. ③Rated current. ④Measurement at 24±4 hours after test conclusion.	AEC-Q200 (MIL-PRF-27)	77

7. Recommended Soldering Conditions

(1) Reflow soldering conditions

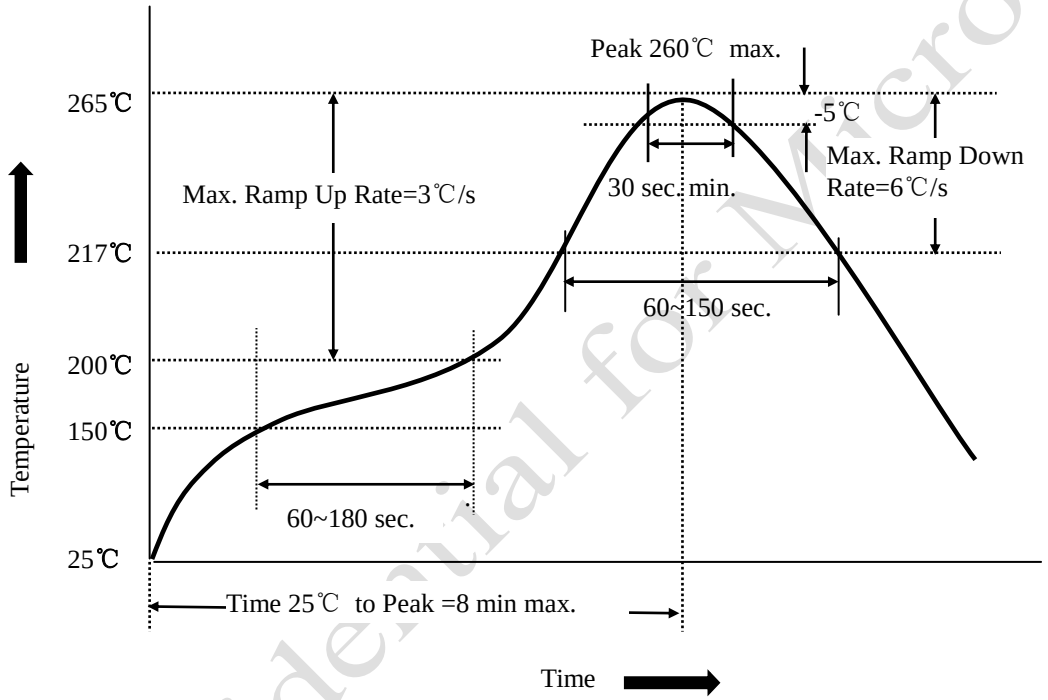

*Above reflow soldering curve is from J-STD-020D.

(2) Iron soldering

The following conditions must be strictly followed when using a soldering iron.

Pre-heating	150℃ 1 minute
Tip temperature	350℃ max
Soldering iron output	30w max
End of soldering iron	Φ1mm max
Soldering time	3 seconds max

Confidential for Microgate

8.Packaging

(1) Dimension of tape (Unit: mm)

MAPM1007**Series

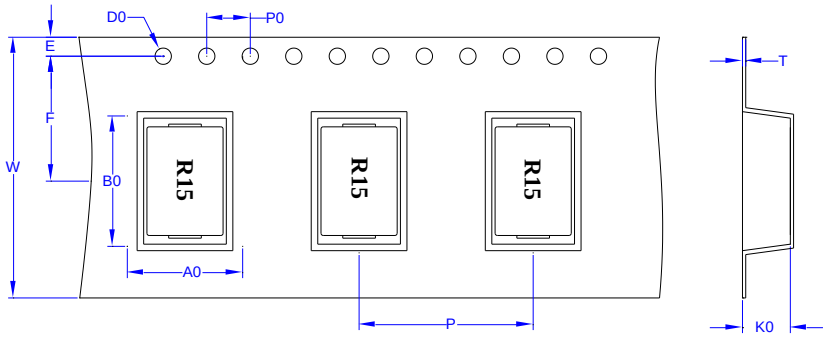

W	24.0±0.3
F	11.5±0.1
E	1.75±0.1
A0	7.6±0.2
B0	11.6±0.2
P	16.0±0.1
P0	4.0±0.1
T	0.40±0.1
ϕ D0	1.5+0.1/-0.0

Series	K0
MPAM100720	2.4±0.2
MPAM100730	3.4±0.2
MPAM100740	4.4±0.2
MPAM100744	4.8±0.2

MAPM100840Series

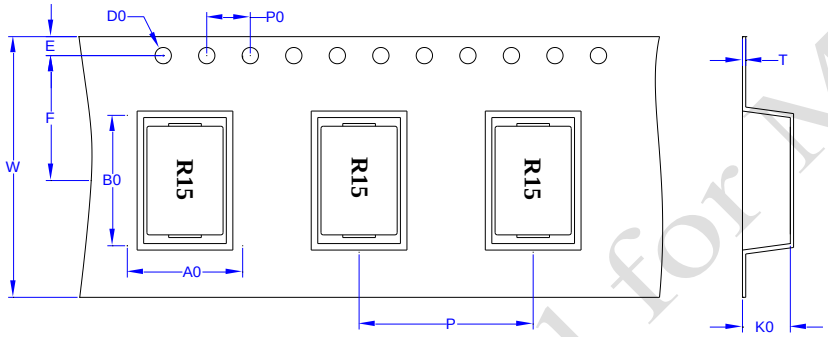

W	24.0±0.3
F	11.5±0.1
E	1.75±0.1
A0	8.7±0.2
B0	10.9±0.2
P	16.0±0.1
P0	4.0±0.1
K0	4.4±0.2
T	0.40±0.1
ϕ D0	1.5+0.1/-0.0

(2) Dimension of reel (Unit: mm)

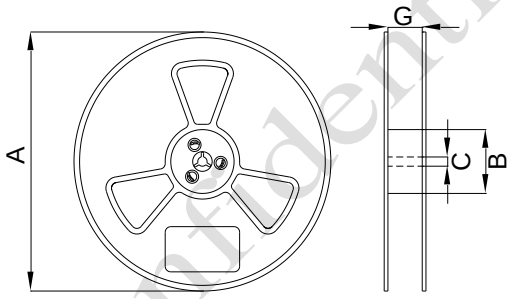

Symbol	Dimension
A	330
B	100
C	13.0±1.0
G	25.4±1.0

(3) Taping figure and drawing direction

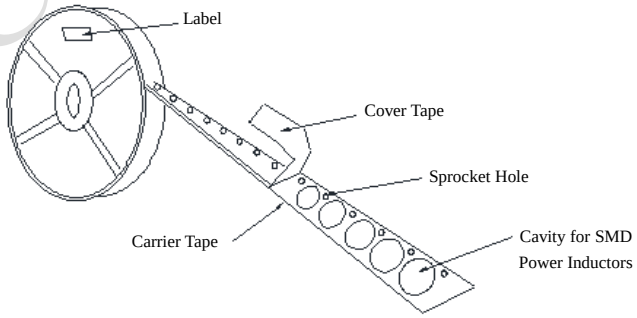

Confidential for Microgate

(4) Packaging quantities:

MAPM100720 1000PCS/Reel.

MAPM100730/40/44 800PCS/Reel.

MAPM100840 800PCS/Reel.

(5) Peeling strength of cover tape:

The peel force of top cover tape shall be between 0.1N to 1.3 N.

*the peel force standard is from EIA-481-D

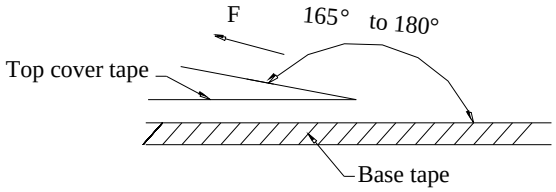

Room Temp. (℃)	Room Humidity (%)	Room aim (hpa)	Peel Speed mm/min
5-35	45-85	860-1060	300

9. Products Storage

(1) Storage period

Products which inspected in MICROGATE over 12 months ago should be examined and used, which can be confirmed with inspection No. marked on the container. Solderability should be checked if this period is exceeded.

(2) Storage conditions

Products should be storage in the warehouse on the following conditions:

Temperature: -10 ~+ 35℃

Humidity: Less than 70% relative and humidity

No rapid change on temperature and humidity.

(3) Don't keep products in corrosive gases such as sulfur, chlorine gas or acid, or it may cause oxidization of electrode, resulting in poor solderability.

(4) Products should be storage on the palette for the prevention of the influence from humidity, dust and so on.

(5) Products should be storage in the warehouse without heat shock, vibration, direct sunlight and so on.

(6) Products should be storage under the airtight packaged condition.

Confidential for Microgate

10. Environment

Compliant with RoHS, Halogen-free, REACH regulations. Test report is available upon request.