CUSTOMER: / **DATE:** 2025-03-17

APPROVAL SPECIFICATION

ROHS+HS COMPLIANT

Automotive **AEC-Q200**

PRODUCT NAME: CMC Inductor

YOUR PART NO.:

OUR PART NO.: AMTHR32-2

VERSION: V1.0

RECEPTION **THE SPECIFICATION HAS BEEN ACCEPTED.** **COMPANY:** **DATE:**		
CFMD	**CHKD**	**RCVD**

Confidential for Microgate

MANUFACTURING NAME

SHENZHEN MICROGATE TECHNOLOGY CO.，LTD
Address: Microgate Technology Building, No. 16, Technology Road, Pingshan, Shenzhen, China.
Postcode：518122
TEL: 86-755-28085000
FAX: 86-755-28085605

CFMD.	CHKD.	DSGD.
Remo	Ryan Yang	Ruijie Ou

【Change History】

Rev.	Effective Date	Changed Contents	Change reasons	Approved By
1.0	2025/03/17	New release	/	Ryan Yang

Confidential for Microgate

1. Scope

This specification is applied to the Automotive CMC Inductor AMTHR32-2

2. Shape and Dimensions

2.1 Shape

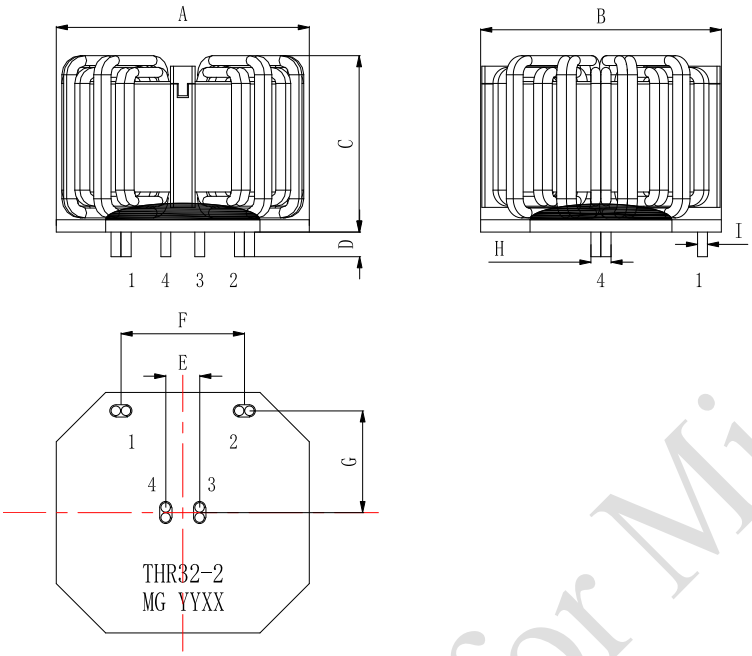

2.2 Dimensions (Unit：mm)

[Table 2.2]

ITEM	A	B	C	D	E
Microgate Spec	42Max	42Max	30Max	3.5±0.5	5.5±0.5
ITEM	**F**	**G**	H	I	/
Microgate Spec	20±0.5	16.5±0.5	3.2±0.4	1.6 ±0.3	/

2.3 Appearance

There is no visual track or other mechanical damage on product surface. Marking must be clear and legible. Core and other parts assembled stably. Mounting dimensions and the position of the terminals should be in accord with standard

3. Schematic

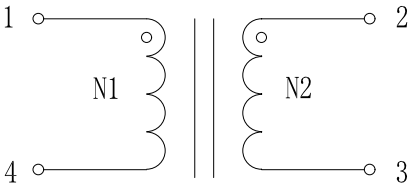

Fig.3.1

Schematic

Confidential for Microgate

NO.	Winding	Start	End	Wire Spec	Turns	Tape Layer	Winding Note
1	N1	1	4	Φ1.6mm*2P	9ts	NA	tightly wound
2	N2	2	3	Φ1.6mm*2P	9ts	NA	tightly wound

4. Electrical Test

ITEM	TEST TERMINAL	TEST SPECIFICATION	TEST CONDITION	TESTER
INDUCTANCE	Pin(1-4)&(2-3)	7mH MIN	10kHz,0.1V,25℃	Agilent E4980A or EQUIV
D.C.R	Pin(1-4)&(2-3)	3.6 mΩ Max	AT 25℃	HIOKI3541 or EQUIV
HI-POT	COIL-COIL	1kVac/5mA/50Hz/3sec	AT 25℃	CH333 or EQUIV

Test Condition: T=25±5℃，RH=65%±20%　　Operating Temperature: -40℃ to +125 ℃,

5. Material List

NO.	ITEM	MATERIAL　DESCRIPTION	TEMP. (FLAME) CLASS	VENDER.	UL FILE NO.
1	CORE	Nanocrystalsor EQUIVALENT MATERIAL	—	1.SHIN OR EQUIV.. 2.JCHN OR EQUIV. 3.Pourleroi OR EQUIV.	—
2	BASE	FR-4 or EQUIVALENT MATERIA	V-0	GUANG CI OR EQUIV.	—
3	WIRE	MODIFIED POLYESTER ENAMELLED WIRE, TYPE QZ-2 or EQUIVALENT	180℃	ELEKTRISOLA HANGZHOU CO., LTD OR EQUIV.	E258243
4	GLUE	EPOXY	—	TIANRUIXING RIVER OR EQUIV OR EQUIV	—

Confidential for Microgate