CUSTOMER: /____ **DATE:** 2024/3/25

APPROVAL SPECIFICATION

ROHS+HS COMPLIANT

Automotive

AEC-Q200

PRODUCT NAME: CMC Inductor

YOUR PART NO.:

OUR PART NO.: AMTHR28-4

VERSION: V1.0

RECEPTION **THE SPECIFICATION HAS BEEN ACCEPTED.** **COMPANY:** **DATE:**		
CFMD	**CHKD**	**RCVD**

MANUFACTURING NAME

SHENZHEN MICROGATE TECHNOLOGY CO.，LTD
Address: Microgate Technology Building, No. 16, Technology Road, Pingshan, Shenzhen, China.

CFMD.	CHKD.	DSGD.
Remo	Ysong	ZJ

Confidential for Microgate

【Change History】

Rev.	Effective Date	Changed Contents	Change reasons	Approved By
1.0	2024/3/25	New release	/	Remo

Confidential for Microgate

1. Scope

This specification is applied to the Automotive Electronics transformer AMTHR28-4

2. Shape and Dimensions

2.1 Shape

Dimensions (Unit :mm)

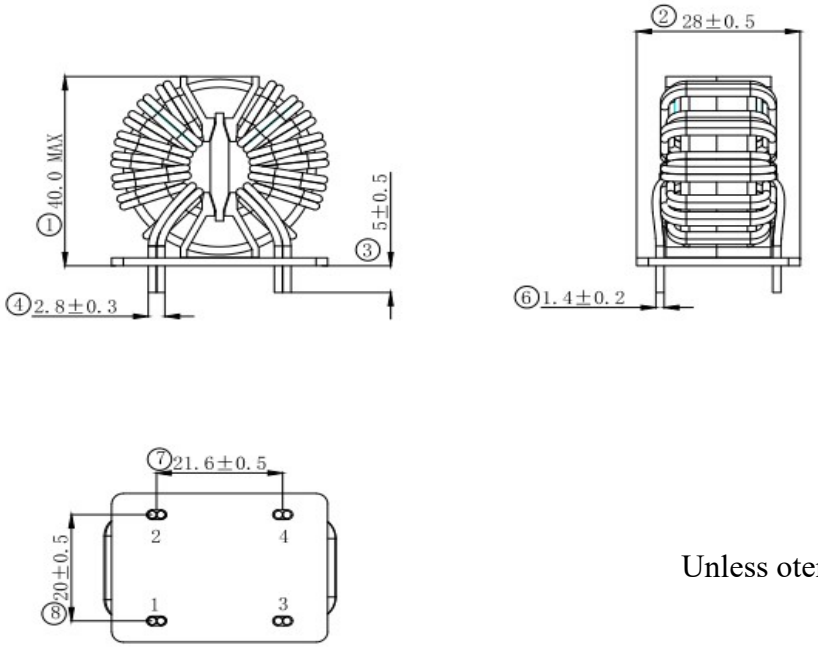

Unless oterwise specified,tolerance±0.5

3. Schematic



Confidential Microgate

4. Winding Specification

WINDING	WIRE(mm)	S-F	TURNS(Ts)	TAPE TURNS(Ts)	NOTE
N1	1EIWH 1.4mm*2P	1-2	9	/	
N2	1EIWH 1.4mm*2P	3-4	9	/	

Note: The products comply with RoHS requirements

5. Electrical Characteristics

NO.	Parameters	Test Terminal	Electrical Specifications	Test Condition
1	Lp	Ls (1-2)/(3-4)	2.0mH min	at 10kHz,1V,25℃
2	DCR	Pin(1-2)/(3-4)	TBDmΩ MAX	at 25℃
3	HI-POT	Wingding to wingding	1500Vac/50Hz/1mA/3s	at 25℃

Confidential for Microgate

6. Material List

NO.	ITEM	TYPE	SUPPLIERS	UL NO.
1	CORE	TYPE:T28 MATERIAL: Nanocrystal	1.CACETH 2.POURLEROI 3.ATM	N/A
2	MAGNE T WIRE	MARK DSG: 1EIW THERMAL RATING:180℃	TAI-I COPPER (GUANZHOU) CO LTD	E234896
3	BASE	MATERIAL:Phenolic MODEL:PM-9820/PM-9630 THERMAL RATING:150℃	SUMITOMO BAKELITE CO LTD	E41429
4	GLUE	TYPE:J868-C1 OPERATING TEMPERATURE：-55 to +130 ℃	DONGGUAN CITY HENG ERLANGS INDUSTRIAL CO.LTD.	
		TYPE:G-500 OPERATING TEMPERATURE：-40 to +180 ℃	LOCTITE	N/A

7.Weight

Net Weight:****g/pc(ref)

Confidential for Microgate