CUSTOMER:_____ **DATE:** _____

APPROVAL SPECIFICATION

RoHS+HSF COMPLIANT

车载品

AEC-Q200

PRODUCT NAME: SMD power inductor

YOUR PART NO.:

OUR PART NO.: AMPIT8040 Series

VERSION: V1.0

RECEPTION **THE SPECIFICATION HAS BEEN ACCEPTED.** **COMPANY：** **DATE：**		
CFMD	**CHKD**	**RCVD**

Confidential for Microgate

MANUFACTURING NAME

SHENZHEN MICROGATE TECHNOLOGY CO.，LTD
Address: Microgate Technology Building, No. 16, Technology Road, Pingshan, Shenzhen, China.
Postcode：518122
TEL: 86-755-28085000
FAX: 86-755-28085605

CFMD.	CHKD.	DSGD.
Remo	Huan Li	Wei Liu

CATALOG

	Component SPEC Version Record……	**3**
1	**Scope……**	**4**
2	**Product Identification……**	**4**
3	**Appearance, Dimensions and Material……**	**4**
4	**Testing Conditions……**	**4**
5	**Electrical Characteristics……**	**5-6**
6	**Reliability……**	**7-9**
7	**Recommended Soldering Condition……**	**10**
8	**Packaging……**	**11**
9	**Visual inspection standard of product……**	**12**
10	**Products Storage……**	**12**

Confidential for Microgate

Component SPEC Version Record

Rev.	Effective Date	Changed Contents	Change Reasons	Approved By
V1.0	2019.12.08	New released	/	Remo

Confidential for Microgate

1. Scope

This specification applies to the AMPIT8040 series of SMD Power inductors.

2. Product Identification

AMPIT ① 8040 ② - 101 ③ M ④ - LF ⑤

① Product Symbol (Automotive electronics products)
② Dimensions
③ Inductance Value (6R8:6.8uH ; 100: 10uH ; 101: 100uH)
④ Inductance Tolerance (M:20% ; N:30%)
⑤ Lead-Free

3. Appearance, Dimensions and Material

3.1 Appearance and dimensions

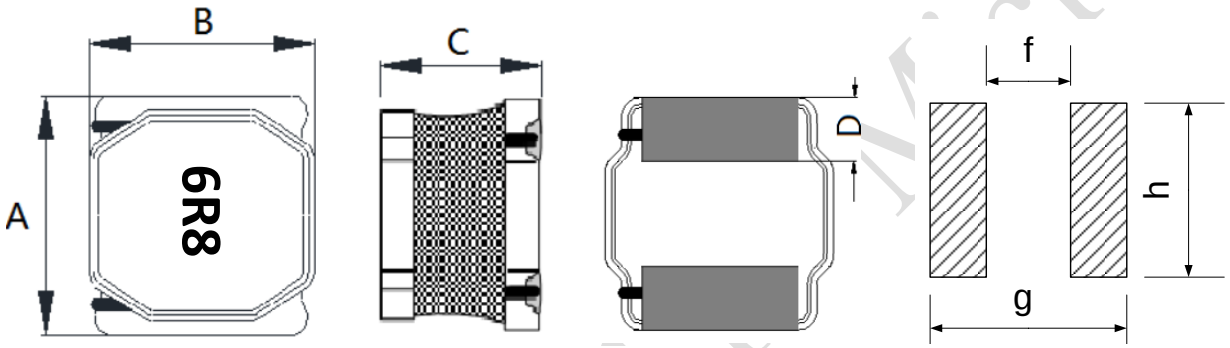

Pictures are for reference only

Recommended Land Pattern

Dimensions in mm						
A	B	C	D	f	g	h
8.0±0.3	8.0±0.3	4.2 Max.	2.10 Typ.	3.8 Typ.	8.2 Typ.	7.5Typ.

3.2 Material List

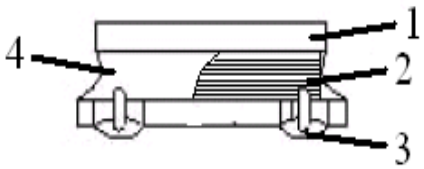

No.	Item	Material
1	Core	Ni-Zn Ferrite
2	Wire	Enameled Copper Wire
3	Terminal Electrode	Ag/Ni/Sn/Cu
4	Magnetic Glue	Epoxy resin and magnetic powder

4. Testing Conditions

Unless otherwise specified, the standard conditions for measurement/test as:
Ambient Temperature : 5 to 35℃
Relative Humidity: 25 to 85% RH
Atmospheric Pressure: 86 to 106 kPa

If any doubt on the results, measurements/tests should be made within the following limits:
Ambient Temperature : 25±1℃
Relative Humidity: 60 to 70% RH
Atmospheric Pressure: 86 to 106 kPa

5. Electrical Characteristics And Test Instruments

Microgate Part No.	Inductance L (uH) 100KHz/1V	DCR(Ω)		Isat[1] (A)	Irms[2] (A)
		Max.	Typ.	Max.	Max.
AMPIT8040-R82M-LF	0.82±20%	0.008	0.006	15.20	7.80
AMPIT8040-R90M-LF	0.90±20%	0.008	0.006	11.00	7.80
AMPIT8040-1R0M-LF	1.0±20%	0.008	0.006	12.00	7.80
AMPIT8040-1R4M-LF	1.4±20%	0.009	0.007	9.00	7.00
AMPIT8040-1R5M-LF	1.5±20%	0.009	0.007	10.00	7.00
AMPIT8040-1R8M-LF	1.8±20%	0.012	0.009	9.50	6.30
AMPIT8040-2R0M-LF	2.0±20%	0.012	0.009	9.25	6.30
AMPIT8040-2R2M-LF	2.2±20%	0.016	0.012	8.30	5.15
AMPIT8040-3R0M-LF	3.0±20%	0.018	0.014	7.10	4.95
AMPIT8040-3R3M-LF	3.3±20%	0.020	0.015	7.52	4.90
AMPIT8040-3R6M-LF	3.6±20%	0.020	0.015	7.52	4.90
AMPIT8040-3R9M-LF	3.9±20%	0.022	0.017	6.30	4.35
AMPIT8040-4R7M-LF	4.7±20%	0.023	0.018	6.00	4.10
AMPIT8040-5R1M-LF	5.1±20%	0.025	0.019	6.00	4.10
AMPIT8040-5R6M-LF	5.6±20%	0.027	0.021	6.00	3.85
AMPIT8040-6R2M-LF	6.2±20%	0.027	0.021	5.10	3.85
AMPIT8040-6R8M-LF	6.8±20%	0.031	0.024	4.95	3.70
AMPIT8040-8R2M-LF	8.2±20%	0.034	0.026	4.30	3.45
AMPIT8040-100M-LF	10±20%	0.038	0.029	4.30	3.30
AMPIT8040-120M-LF	12±20%	0.053	0.041	3.55	2.85
AMPIT8040-150M-LF	15±20%	0.061	0.047	3.25	2.60
AMPIT8040-180M-LF	18±20%	0.068	0.052	3.10	2.45
AMPIT8040-220M-LF	22±20%	0.086	0.066	2.80	2.20
AMPIT8040-270M-LF	27±20%	0.101	0.078	2.40	2.00
AMPIT8040-330M-LF	33±20%	0.125	0.096	2.20	1.80
AMPIT8040-360M-LF	36±20%	0.133	0.102	2.10	1.75
AMPIT8040-390M-LF	39±20%	0.133	0.102	2.10	1.75
AMPIT8040-430M-LF	43±20%	0.147	0.113	1.90	1.65
AMPIT8040-470M-LF	47±20%	0.177	0.136	1.80	1.55
AMPIT8040-510M-LF	51±20%	0.185	0.142	1.70	1.50
AMPIT8040-560M-LF	56±20%	0.192	0.148	1.65	1.45
AMPIT8040-620M-LF	62±20%	0.237	0.182	1.55	1.30
AMPIT8040-680M-LF	68±20%	0.252	0.194	1.50	1.25
AMPIT8040-750M-LF	75±20%	0.274	0.211	1.40	1.20
AMPIT8040-820M-LF	82±20%	0.293	0.225	1.30	1.15
AMPIT8040-910M-LF	91±20%	0.354	0.272	1.20	1.05
AMPIT8040-101M-LF	100±20%	0.377	0.29	1.20	1.00
AMPIT8040-121M-LF	120±20%	0.428	0.329	1.15	0.95
AMPIT8040-151M-LF	150±20%	0.533	0.410	1.10	0.85
AMPIT8040-221M-LF	220±20%	0.702	0.540	0.85	0.80
AMPIT8040-331M-LF	330±20%	1.066	0.820	0.70	0.65
AMPIT8040-102M20-LF	1000±20%	3.640	2.800	0.41	0.30

Confidential for Microgate

Test instruments and remarks

* All test data is referenced to 25℃ ambient.
* L test by CHROMA 3302 meter or equivalent.
* DCR test by Tonghui TH2516B meter or equivalent.
* CHROMA 3302 and 1320 meter for IDC.
* Isat: DC current (A) that will cause L0 to drop approximately 30%.
* Irms: DC current (A) that will cause an temperature rise ΔT approximate to 40℃.
* The rated current as listed is either the saturation current or the heating current depending on which value is lower.
* Operating temperature: -40℃ to +125℃(Including self-heating)
* The part temperature (ambient + temp rise) should not exceed 125℃ under worse case operating conditions. Circuit design, component placement, PCB trace size and thickness, airflow and other cooling provision all affect the part temperature. Part temperature should be verified in the end application.

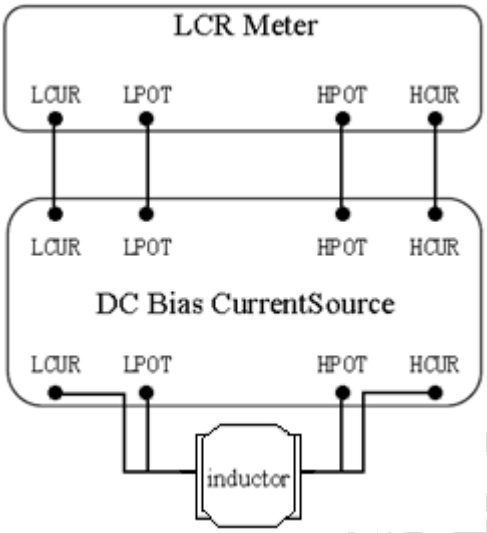

Isat test schematic diagram

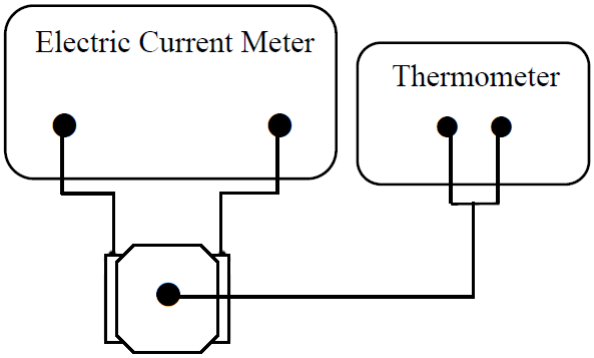

Irms test schematic diagram

Confidential for microgate

6. Reliability

No.	Item	Requirements	Test Methods and Remarks	Reference	Sample Size
1	Solderability	(1) Terminal area shall be at least 95% covered.	①Temperature:245±5℃, flux 5-10 s. ②Sample immersion tin furnace 3 ±1s. ③Sn/3.0Ag/0.5Cu	AEC-Q200 (J-STD-002)	15
2	Resistance to Soldering Heat	(1) No case deformation or change in appearance. (2)｜ΔL0/L0｜≤10%	①The peak temperature: 260+5/-0℃. ②Reflow:3times. ③Temperature curve is as below: 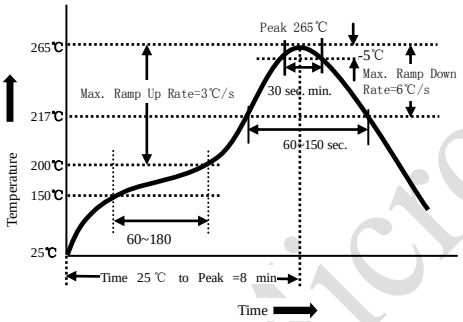	AEC-Q200 (MIL-STD-202 Method 210)	30
3	High Temperature Storage	(1) No case deformation or change in appearance. (2)｜ΔL0/L0｜≤10%	①Temperature: 150±2℃. ②Time : 1000(+24,0) hours. ③Measurement at 24±4 hours after test conclusion. 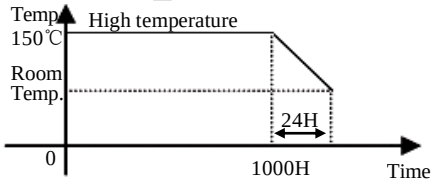	AEC-Q200 (MIL-STD -202 Method 108)	77
4	Low Temperature Storage	(1) No case deformation or change in appearance. (2)｜ΔL0/L0｜≤10%	①Temperature: -55±2℃. ②Time : 1000(+24,0) hours. ③Measurement at 24±4 hours after test conclusion. 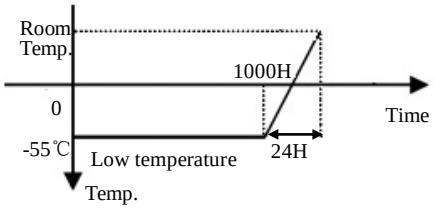	JESD22-A119	77
5	Temperature Cycling	(1) No case deformation or change in appearance. (2)｜ΔL0/L0｜≤10%	①First -55℃ for 30 minutes, last 125℃ 30minutes as 1 cycle. Go through 1000 cycles.. ②Max transfer time is 1 minutes. ③Measurement at 24±4 hours after test conclusion. 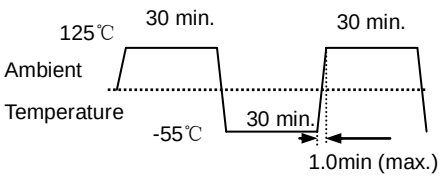	AEC-Q200 (JESD22-A104)	77

Confidential - Microgate

No.	Item	Requirements	Test Methods and Remarks	Reference	Sample Size
6	Resistance to Solvents	(1) No case deformation or change in appearance. (2)｜ΔL0/L0｜≤10%	①Prepare solvent (isopropyl alcohol: kerosene: ethylbenzene =4:9:3 volume) ②Specimen be completely immersed in solvent for 3+0.5/-0min ③Brush dipped in solution until wetted and brush part 10 strokes . ④Repeat 2 more times, Air blow dry. ⑤Inspect at 3x magnifier for marking and 10x for part damage. Note: Add Aqueous wash chemical. OKEM Clean or equivalent. Do not use banned solvents.	AEC-Q200 (MIL-STD-202 Method 215)	15
7	ESD	(1) No case deformation or change in appearance. (2)｜ΔL0/L0｜≤10%	①HBM ESD discharge waveform,8KV	AEC-Q200 (AEC-Q200-002)	15
8	Biased Humidity	(1) No case deformation or change in appearance. (2)｜ΔL0/L0｜≤10%	①1000(+24,0) hours, 85 ℃/85%RH. ②Unpowered. ③Measurement at 24±4 hours after test conclusion.	AEC-Q200 (MIL-STD -202 Method 103)	77
9	Terminal Strength	(1) No case deformation or change in appearance. (2)｜ΔL0/L0｜≤10%	①The test samples shall be soldered to the board. ②17.64N, 60±1s 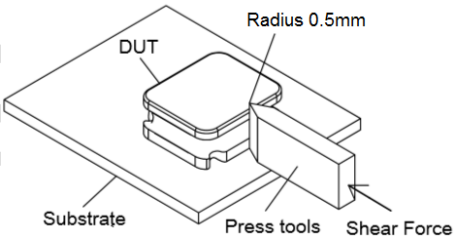	AEC-Q200 (AEC-Q200-006)	30
10	Board Flex	(1) No case deformation or change in appearance. (2)｜ΔL0/L0｜≤10%	①Part mounted on a 100mm*40mm FR4 PCB board, which is 1.6±0.2 mm thick and as a Layer-thickness 35 μm ±10 μm. ②Bending speed is 1mm/s. ③Keeping the P.C Board 2 mm minimum for 60 seconds. 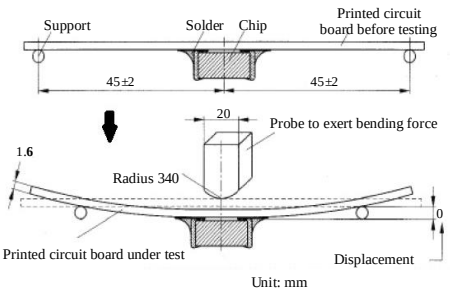	AEC-Q200 (AEC-Q200-005)	30

Confidential for Microgate

No.	Item	Requirements	Test Methods and Remarks	Reference	Sample Size
11	Vibration	(1) No case deformation or change in appearance. (2)｜ΔL0/L0｜≤10%	①Frequency range : 10~2000Hz. ②Amplitude: 1.5mm ,5g. ③Sweep time and duration: 10~2000~10Hz for 20 minutes. ④Each four hours(12 times) in X,Y,Z direction, 12 hours in total.	AEC-Q200 (MIL-STD-202 Method 204)	30
12	Mechanical Shock	(1) No case deformation or change in appearance. (2)｜ΔL0/L0｜≤10%	Half sine shock pulse,100g,6ms,6 shocks in each 3 mutually perpendicular directions (total of 18 shocks)	AEC-Q200 (MIL-STD-202 Method 213)	30
13	Loading at High Temperature	(1) No case deformation or change in appearance. (2)｜ΔL0/L0｜≤10%	①Temperature: 125±2℃. ②Time : 1000 (+24,0) hours. ③Applied Current : Rated current. ④Measurement at 24±4 hours after test conclusion.	AEC-Q200 (MIL-PRF-27)	77
14	Loading at Damp Heat	(1) No case deformation or change in appearance. (2)｜ΔL0/L0｜≤10%	①Temperature: 60±5℃, Humidity: 90% to 95% RH. ②Time : 1000 (+24,0) hours. ③Applied Current : Rated current. ④Measurement at 24±4 hours after test conclusion.	AEC-Q200	77

*All above experiments items need 3 Lot., sample size is as specified in the table above.
*Sample size standard is from AEC-Q200 : qualification sample size requirements.

Confidential for Microgate

7. Recommended Soldering Conditions

(1) Reflow soldering conditions

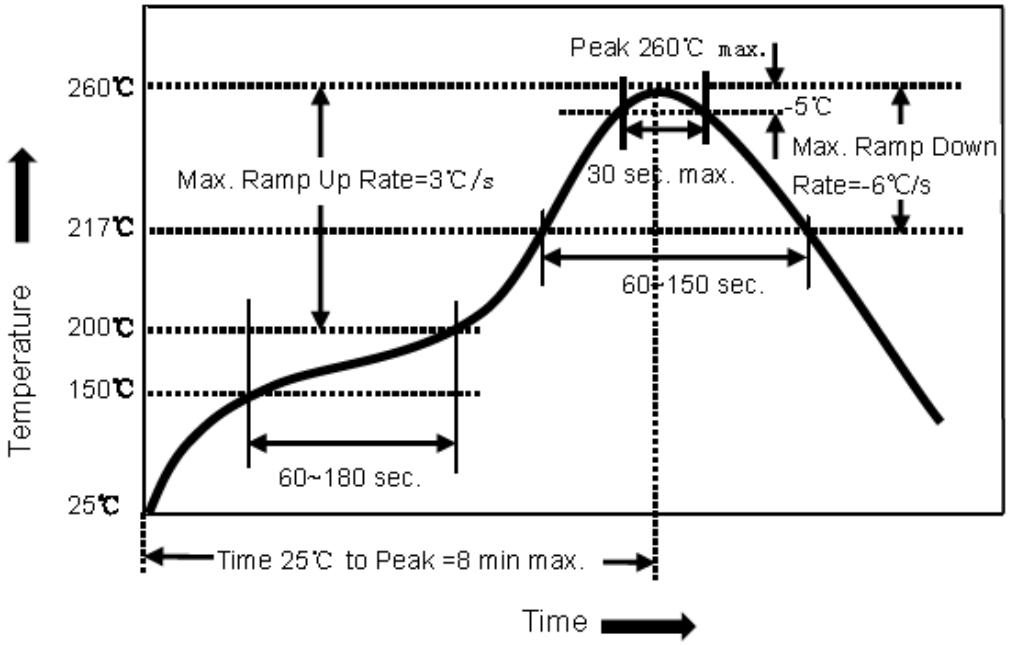

*Above reflow soldering curve is from J-STD-020D.

(2) Iron soldering

The following conditions must be strictly followed when using a soldering iron.

Pre-heating	150℃ 1 minute
Tip temperature	350℃ max
Soldering iron output	30w max
End of soldering iron	Φ1mm max
Soldering time	3 seconds max

Confidential for Microgate

8.Packaging

(1) Dimension of tape (Unit: mm)

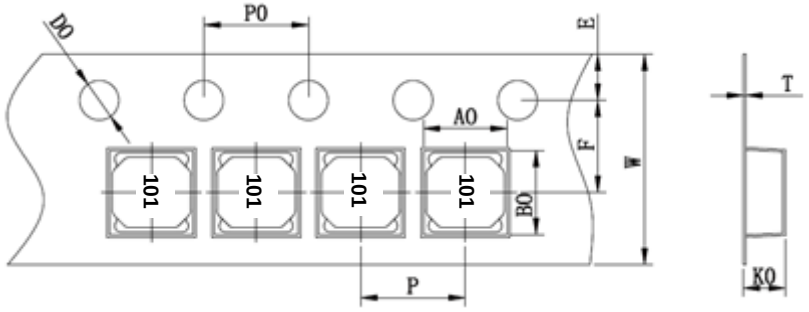

W	A0	B0	K0	E	F	P	P0	D0	T
16.0±0.3	8.35±0.1	8.35±0.1	4.4±0.1	1.75±0.1	7.5±0.1	12.0±0.1	4.0±0.1	1.5+0.1/-0.0	0.40±0.05

(2) Dimension of reel (Unit: mm)

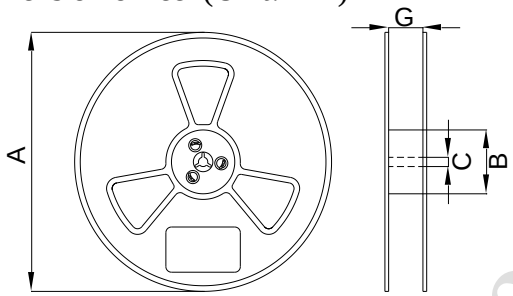

Symbol	Dimension
A	330±2
B	100±2
C	13.5±0.2
G	17.0±0.5

(3) Taping figure and drawing direction

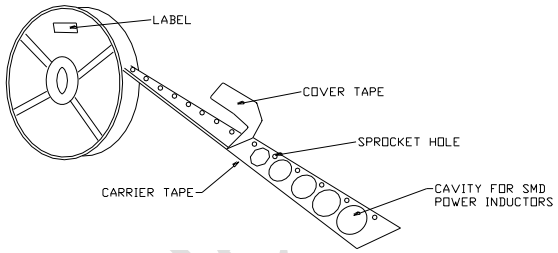

(4) Packaging quantities: 1000PCS/Reel.

(5) Peeling strength of cover tape:

The peel force of top cover tape shall be between 0.10N to 1.3N

*the peel force standard is from EIA-481-D

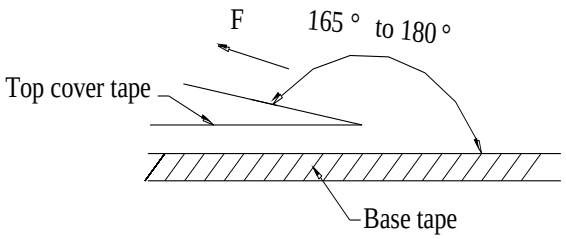

Room Temp. (℃)	Room Humidity (%)	Room aim (hpa)	Peel Speed mm/min
5-35	45-85	860-1060	300

Confidential for Microgate

9. Visual inspection standard of product

No.	Defect Item	Graphic	Rejection identification	Acceptance
1	Core defect	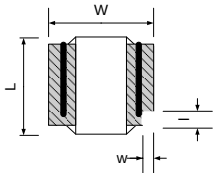	l >L/6 or w >W/6, NG.	AQL=0.65
2	Missing resin	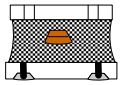	The area of missing resin more than 1/3 single face, NG	AQL=0.65
3	Cold solder	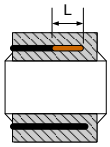	L more than 1 mm, NG.	AQL=0.65
4	Solder uneven	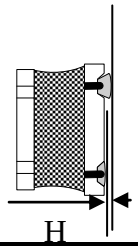	H>0.1mm. NG.	AQL=0.65

10.Products Storage

(1) Storage period

Solderability shall be guaranteed for 12 months from the date of manufacture on condition that they are stored at the environment specified in specification. For those parts, which passed more than the time shall be checked solder-ability before use.

(2) Storage conditions

Products should be storage in the warehouse on the following conditions:

Temperature: -10 ~+ 35℃

Humidity: Less than 70% relative and humidity

No rapid change on temperature and humidity.

(3) Don't keep products in corrosive gases such as sulfur, chlorine gas or acid, or it may cause oxidization of electrode, resulting in poor solderability.

(4) Products should be storage on the palette for the prevention of the influence from humidity, dust and so on.

(5) Products should be storage in the warehouse without heat shock, vibration, direct sunlight and so on.

(6) Products should be storage under the airtight packaged condition.

Confidential for Microgate