CUSTOMER: _____ **DATE:** _____

For Automotive Electronics
APPROVAL SPECIFICATION

RoHS+HSF
COMPLIANT

车载品

AEC-Q200

PRODUCT NAME:	SMD Wire Wound Chip Inductor
YOUR PART NO.:	
OUR PART NO.:	AMGTC0805C- Series
VERSION:	V1.0

RECEPTION **THE SPECIFICATION HAS BEEN ACCEPTED.** **COMPANY:** **DATE:**		
CFMD	**CHKD**	**RCVD**

MANUFACTURING NAME

SHENZHEN MICROGATE TECHNOLOGY CO., LTD
Address: Microgate Technology Building, No. 16,
Technology Road, Pingshan, Shenzhen, China.
Postcode: 518122
TEL: 86-755-28085000
FAX: 86-755-28085605

CFMD.	CHKD.	DSGD.
Remo	-	Wei Liu

Confidential for Microgate

CATALOG

	Component SPEC Version Record……	3
1	Scope……	4
2	Product Identification……	4
3	Appearance, Dimensions and Material……	4
4	Testing Conditions……	5
5	Rating……	5-6
6	Electrical Characteristics……	7
7	Reliability……	8-10
8	Recommended Soldering Condition……	11-12
9	Packaging……	13
10	Storage……	14
11	Transportation……	14
12	Warning and Attentions……	14-15
13	Cleaning……	16
14	Measuring Method of Inductance……	16

Confidential for Microgate

Component SPEC Version Record

Rev.	Effective Date	Changed Contents	Change Reasons	Approved By
1.0	2019.09.25	New released	/	Remo

Confidential for Microgate

1. Scope

This specification applies to the AMGTC0805C series of SMD Wire Wound Chip Inductors.

2. Product Identification

AMGTC	0805	C	10N	J	S	T
①	②	③	④	⑤	⑥	⑦

① Product Symbol(Automotive electronics products)
② Dimensions (0805 inch)
③ Features
④ Inductance Value (4N7:4.7nH 10N:10nH; R10:100nH; 1R0:1000nH)
⑤ Inductance Tolerance

Code	F	G	H	J	K
Tolerance	±1%	±2%	±3%	±5%	±10%

⑥ Termination materials (G: gold ; S: sn)
⑦ Packaging style (T: Taping ; B: Bulk)

3. Appearance, Dimensions and Material

(1) Appearance and dimensions

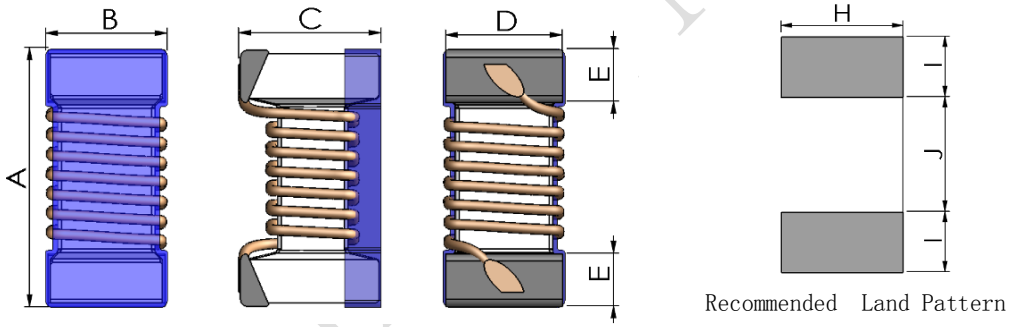

Dimensions in mm							
A	B	C	D	E	H	I	J
2.08±0.2	1.35±0.2	1.32±0.2	1.25±0.1	0.45±0.1	1.78 Ref.	1.02 Ref.	0.76 Ref.

(2) Material List

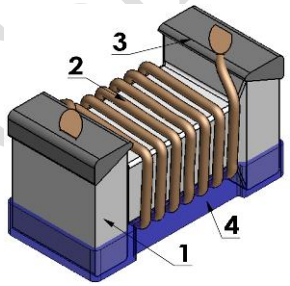

No.	Item	Material
1	Core	Ceramic
2	Wire	Enameled Copper Wire
3	Terminal Electrode	Sn
4	Coating	Ultraviolet epoxy resin

Confidential Microgate

4. Testing Conditions

Unless otherwise specified, the standard conditions for measurement/test as:
Ambient Temperature : 5 to 35℃
Relative Humidity: 25 to 85% RH
Atmospheric Pressure: 86 to 106 kPa

If any doubt on the results, measurements/tests should be made within the following limits:
Ambient Temperature : 25±1℃
Relative Humidity: 60 to 70% RH
Atmospheric Pressure: 86 to 106 kPa

5. Rating

Operating temperature:-55℃~150℃

Microgate Part No.	Inductance（nH）	Tolerance	Q (min.)	L/Q Test Frequency (MHz)	DC Resistance（Ω max.）	Rated Current (mA)	SRF (MHz) (min.)
AMGTC0805C2N7□ST	2.7	J,K	40	250/1000	0.06	800	7900
AMGTC0805C3N0□ST	3.0	J,K	40	250 /1500	0.06	800	7900
AMGTC0805C3N3□ST	3.3	J,K	40	250 /1500	0.08	600	7900
AMGTC0805C4N7□ST	4.7	K	35	250 /1000	0.08	600	6200
AMGTC0805C5N6□ST	5.6	J,K	55	250 /1000	0.065	600	5900
AMGTC0805C6N8□ST	6.8	J,K	50	250 /1000	0.11	600	5600
AMGTC0805C7N5□ST	7.5	J,K	50	250 /100	0.14	600	4800
AMGTC0805C8N2□ST	8.2	J,K	50	250 /100	0.12	600	4700
AMGTC0805C10N□ST	10	G,J,K	60	250/500	0.1	600	4300
AMGTC0805C12N□ST	12	G,J,K	50	250/500	0.15	600	4000
AMGTC0805C15N□ST	15	G,J,K	50	250/500	0.17	600	3400
AMGTC0805C18N□ST	18	G,J,K	50	250/500	0.2	600	3300
AMGTC0805C22N□ST	22	G,J,K	55	250/500	0.22	500	2600
AMGTC0805C24N□ST	24	G,J,K	50	250/500	0.22	500	2400
AMGTC0805C27N□ST	27	G,J,K	55	250/500	0.25	500	2580
AMGTC0805C33N□ST	33	G,J,K	60	250/500	0.27	500	2150
AMGTC0805C36N□ST	36	G,J,K	55	250/500	0.27	500	1900
AMGTC0805C39N□ST	39	G,J,K	60	250/500	0.29	500	2000
AMGTC0805C43N□ST	43	G,J,K	60	200/500	0.3	500	1800

Confidential for Microgate

Microgate Part No.	Inductance（nH）	Tolerance	Q (min.)	L/Q Test Frequency (MHz)	DC Resistance（Ω max.）	Rated Current (mA)	SRF (MHz) (min.)
AMGTC0805C47N□ST	47	G,J,K	60	200 /500	0.31	500	1700
AMGTC0805C56N□ST	56	G,J,K	60	200 /500	0.3	500	1600
AMGTC0805C68N□ST	68	G,J,K	60	200/500	0.38	500	1500
AMGTC0805C82N□ST	82	G,J,K	65	150 /500	0.42	400	1330
AMGTC0805C91N□ST	91	G,J,K	65	150 /500	0.46	400	1330
AMGTC0805CR10□ST	100	G,J,K	65	150 /500	0.46	400	1250
AMGTC0805CR12□ST	120	G,J,K	50	150 /250	0.51	400	1100
AMGTC0805CR13□ST	130	G,J,K	50	100 /250	0.56	400	920
AMGTC0805CR15□ST	150	G,J,K	50	100 /250	0.56	400	920
AMGTC0805CR16□ST	160	G,J,K	50	100 /250	0.60	400	920
AMGTC0805CR18□ST	180	G,J,K	50	100 /250	0.64	400	920
AMGTC0805CR22□ST	220	G,J,K	50	100 /250	0.7	400	850
AMGTC0805CR27□ST	270	G,J,K	48	100 /250	1	350	730
AMGTC0805CR33□ST	330	G,J,K	48	100 /250	1.4	310	650
AMGTC0805CR39□ST	390	J,K	48	100 /250	1.5	290	600
AMGTC0805CR47□ST	470	J,K	33	50 /100	1.76	250	375
AMGTC0805CR56□ST	560	J,K	23	25 /50	1.9	230	330
AMGTC0805CR68□ST	680	J,K	23	25 /50	2.2	190	310
AMGTC0805CR82□ST	820	J,K	23	25 /50	2.35	180	310
AMGTC0805CR91□ST	910	J,K	22	25 /50	2.45	170	250
AMGTC0805C1R0□ST	1000	J,K	20	25 /50	2.4	170	220
AMGTC0805C1R2□ST	1200	J,K	20	25 /25	2.9	150	180
AMGTC0805C1R5□ST	1500	J,K	20	25 /25	3.3	150	160
AMGTC0805C1R8□ST	1800	J,K	20	25 /25	3.5	150	130
AMGTC0805C2R2□ST	2200	J,K	20	25 /25	4.5	150	100
AMGTC0805C2R7□ST	2700	J,K	18	25 /25	4.8	100	80

Confidential for Microgate

6. Electrical Performance

Inductance、Q factor

Inductance；Q factor shall meet item 5 when measured on the condition of Table 1.

Table 1

Measuring Equipment	Impedance analyzer keysight E4982A or equivalent
Measuring Frequency	Item 5
Measuring signal level	-13dBm
Measuring Fixture	keysight 16197A

DC Resistance

D.C Resistance shall meet item 5 when measured on the condition of Table 2.

Table 2

Measuring Equipment	LCR Meter HIOKI 3542 or equivalent

Self-Resonant Frequency (S.R.F)

S.R.F. shall meet item 5 when measured on the condition of Table 3.

Table 3

Measuring Equipment	Impedance analyzer Agilent E4991A，Network analyzer Keysight E5071C or equivalent

Rated current

Temperature rise no more than 40℃ against chip surface temperature when the allowable current is applied.

Table 4

Measuring Equipment	DC Power Supplier, Current Meter, Thermometer

Confidential for Microgate

7. Reliability

No.	Item	Requirements	Test Methods and Remarks	Reference	Sample Size
1	Solderability	Terminal area shall be at least 95% covered .	①Temperature:240±5℃, flux 5-10 s. ②Sample immersion tin furnace 3 ±1s. ③Sn/3.0Ag/0.5Cu	AEC-Q200	15
2	Resistance to Soldering Heat	(1) No case deformation or change in appearance. (2)｜ΔL/L0｜≤5% (3)｜ΔQ/Q0｜≤20% (4)｜ΔDCR/DCR0｜≤10%	①The peak temperature: 260+5/-0℃. ②Reflow:3times. ③Temperature curve is as below: 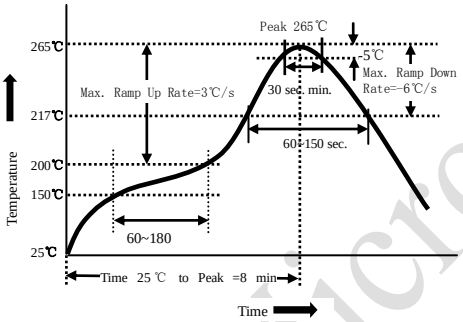	AEC-Q200	30
3	High Temperature Storage		①Temperature: 150±2℃. ②Time : 1000(+48,0) hours. ③Measurement at 24±4 hours after test conclusion. 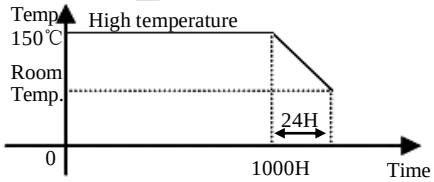	AEC-Q200	77
4	Low Temperature Storage		①Temperature: -55±2℃. ②Time : 1000(+48,0) hours. ③Measurement at 24±4 hours after test conclusion. 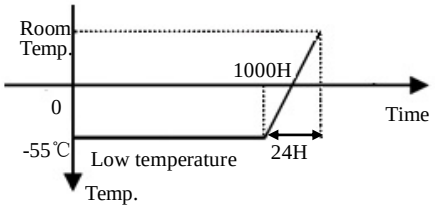	JESD22-A119	77
5	Thermal shock		①First -55℃ for 30 minutes, last 150℃ 30minutes as 1 cycle. Go through 1000 cycles. ②Max transfer time is 20 second. ③Measurement at 24±4 hours after test conclusion. 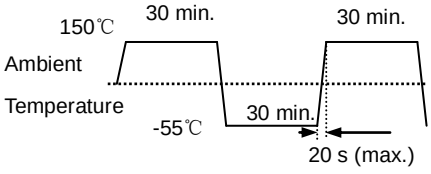	AEC-Q200	77

Confidential · Microgate

No.	Item	Requirements	Test Methods and Remarks	Reference	Sample Size
6	Humidity Resistance	(1) No case deformation or change in appearance. (2) | ΔL/L0 | ≤5% (3) | ΔQ/Q0 | ≤20% (4) | ΔDCR/DCR0 | ≤10%	①1000(+48,0) hours, 85 ℃/85%RH. ②Unpowered. ③Measurement at 24±4 hours after test conclusion. 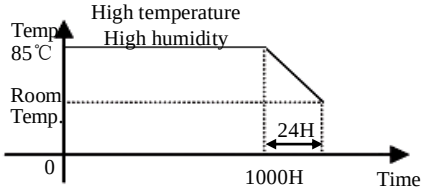	AEC-Q200	77
7	Terminal Strength	No case deformation or change in appearance.	①The test samples shall be soldered to the board. ②5N, 60±1s 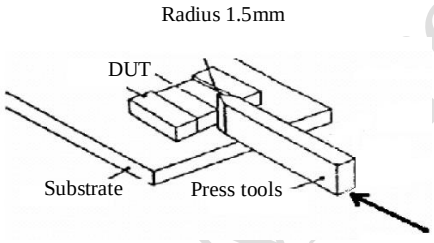	AEC-Q200	30
8	Board Flex	(1) No case deformation or change in appearance. (2) | ΔL/L0 | ≤5% (3) | ΔQ/Q0 | ≤20% (4) | ΔDCR/DCR0 | ≤10%	①Part mounted on a 100mm*40mm FR4 PCB board, which is 1.6mm thick and as a Layer-thickness 35 μm ±10 μm. ②Bending speed is 1mm/s. ③Keeping the P.C Board 2 mm minimum for 60 seconds. 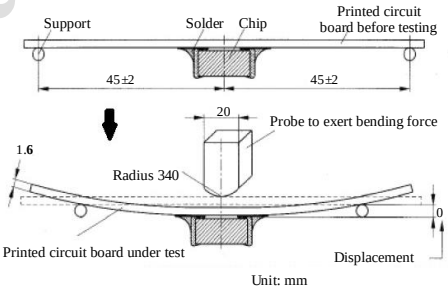	AEC-Q200	30
9	Vibration	(1) No case deformation or change in appearance. (2) | ΔL/L0 | ≤5% (3) | ΔQ/Q0 | ≤20% (4) | ΔDCR/DCR0 | ≤10%	10~2000Hz,5g,20min/Cycle,4 hours in each 3 mutually perpendicular directions (total of 12 hours)	AEC-Q200	30

Confidential for Microgate

No.	Item	Requirements	Test Methods and Remarks	Reference	Sample Size
10	Mechanical Shock	(1) No case deformation or change in appearance. (2) | ΔL/L0 | ≤5% (3) | ΔQ/Q0 | ≤20% (4) | ΔDCR/DCR0 | ≤10%	Half sine shock pulse,100g,6ms,6 shocks in each 3 mutually perpendicular directions (total of 18 shocks)	AEC-Q200	30
11	Loading at High Temperature	(1) No case deformation or change in appearance. (2) | ΔL/L0 | ≤5% (3) | ΔQ/Q0 | ≤20% (4) | ΔDCR/DCR0 | ≤10%	①Temperature: 150±2℃. ②Time : 1000(+48,0) hours. ③Rated current. ④Measurement at 24±4 hours after test conclusion.	AEC-Q200	77
12	Loading at Damp Heat	(1) No case deformation or change in appearance. (2) | ΔL/L0 | ≤5% (3) | ΔQ/Q0 | ≤20% (4) | ΔDCR/DCR0 | ≤10%	①Temperature: 60±2℃, Humidity: 90% to 95% RH ; ② Duration: 1000(+48,0) hours ③ current: Rated current. ④Measurement at 24±4 hours after test conclusion.	AEC-Q200	77
13	ESD Test		HBM ESD discharge waveform,8KV	AEC-Q200	15

*All above experiments items need 3 Lot., sample size is as specified in the table above.

*Sample size standard is from AEC-Q200: qualification sample size requirements.

Confidential for Microgate

8. Recommended Soldering Conditions

(1) Reflow soldering conditions

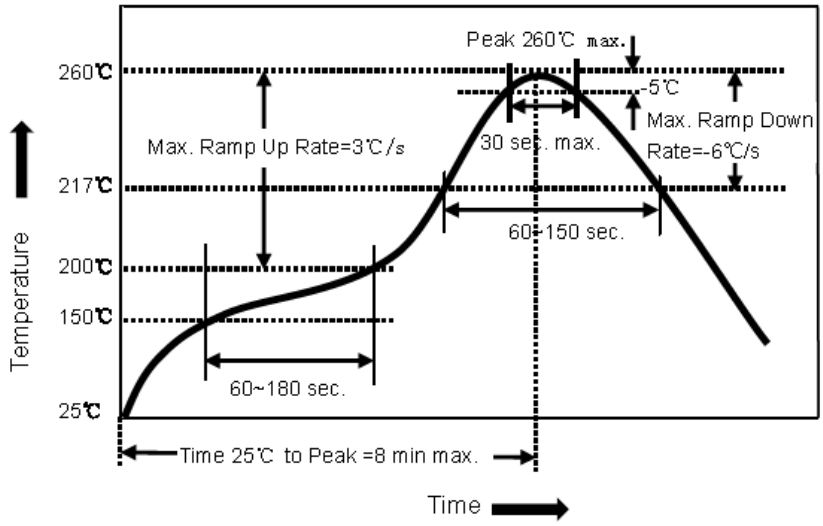

Above reflow soldering curve is from J-STD-020D.

(2)Solder Volume

Solder shall be used not to be exceeded the upper limits as shown below.

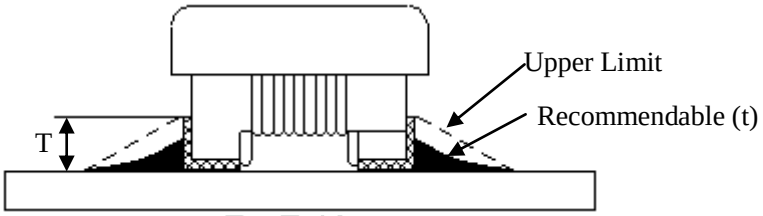

1/3T≦t≦T

(T: Height of electrode)

a. Exceeding solder volume may cause the failure of mechanical or electrical performance.

b. Before soldering, please ensure that the solder should not adhere to the wire part of chip.

c. Please pay particular attention to whether there is flux remaining on surface of the wire part of chip after subjected to reflow soldering since this may causing short circuit of parts.

(3) Iron soldering

The following conditions must be strictly followed when using a soldering iron.

①

Pre-heating	150℃, 1 minute
Tip temperature	350℃ max
Soldering iron output	30w max
End of soldering iron	Φ1mm max
Soldering time	3 seconds max

Confidential for Microgate

②Don’t touch the coil core directly with the top of the iron

③In the welding process, the electric iron cannot bump into the enamel-insulated wire, lest components should have evidence of damage.

④The test, link products and so on solder correct and support on both sides the method contrast wrongly:

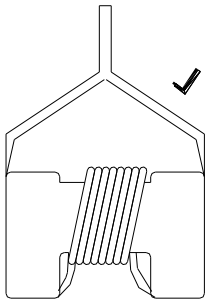

Figure 1 Correct method

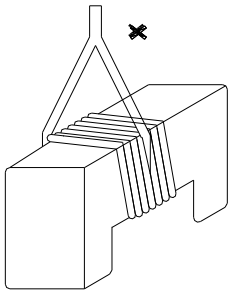

Figure 2 Wrongly method

Tweezers of fixture should support on both sides of the chip, and the correct support way as shown as Figure1. Tweezers of fixture should not support on enamel-insulated wire of the chip, lest enamel-insulated wire should have evidence of damage, the wrong support way as shown as Figure 2.

Confidential for Microgate

9.Packaging Information

(1) Dimension of tape (Unit: mm)

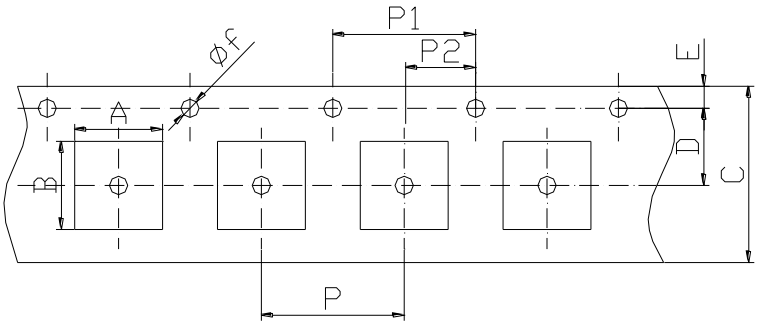

Series	AMGTC0805C
A	1.55
B	2.45
C	8.0
D	3.5
E	1.75
φf	1.5
P	4.0
P1	4.0
P2	2.0

(2) Dimension of reel (Unit: mm)

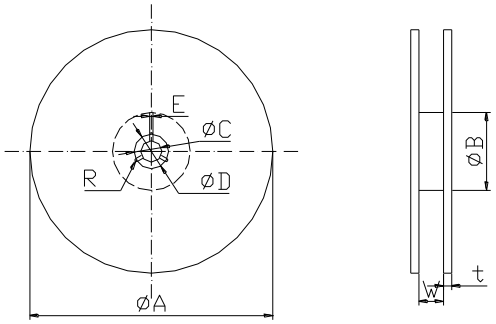

A	180
B	60
C	13
D	21
E	2.0
R	R1.0
W	10
t	1.0

(3) Taping figure and drawing direction

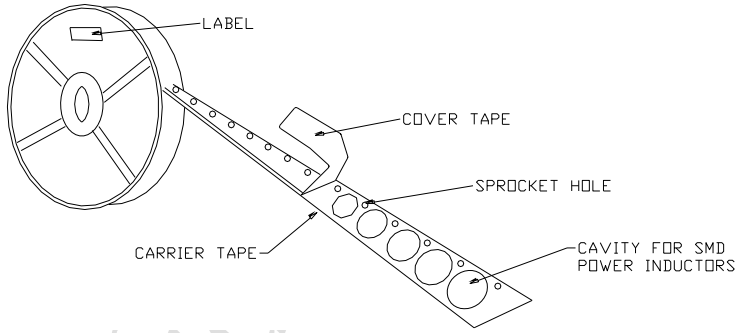

(4)Packaging quantities: 2,000PCS/Reel.

(5) Peeling strength of cover tape:

The force tearing off cover tape is 15 to 65 grams in the arrow direction under the following conditions.

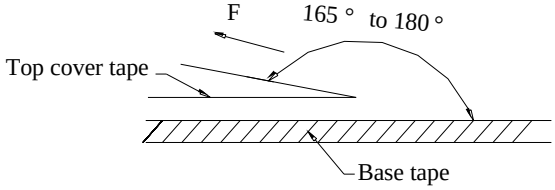

Room Temp. (℃)	Room Humidity (%)	Room aim (hpa)	Peel Speed mm/min
5-35	45-85	860-1060	300

Confidential for Microgate

10. Storage

a. The solder ability of the external electrode may be deteriorated if packages are stored where they are exposed to high temperature or high humidity. Besides, to ensure packing material's good state, packages must be stored at -10℃ to 40℃ and 15% ~85% RH.
b. The solder ability of the external electrode may be deteriorated if packages are stored where they are exposed to dust of harmful gas (e.g. HCl, sulfurous gas of H_2S).
c. Packaging materials may deform if packages are exposed directly to sunlight.
d. Minimum packages, such as polyvinyl heat-seal packages shall not be opened until they are used. If opened, use the reels as soon as possible.
e. Solderability shall be guaranteed for 12 months from the date of manufacture on condition that they are stored at the environment specified in specification. For those parts, which passed more than the time shall be checked solder-ability before use.

11. Transportation

The cases shall not be damaged, destroyed and rained on.

12. Warning and Attentions

(1) Precautions on Use

a. Always wear static control bands to protect against ESD.
b. Any devices used (soldering iron, measuring instruments) should be properly grounded.
c. Use non-magnetic tweezers when handing the chips.
d. Pre-heating when soldering, and refer to the recommended condition specified in specification.
e. Don't apply current in excess of the rated current value. It may cause damage to components due to over-current.
f. Keep clear of anything that may generate magnetic fields such as speakers, coils.
g. When soldering, the electrical characteristics may be varied due to hot energy and mechanical stress.
h. When coating products with resin, the relatively high resin curing stress may change the electrical characteristics. For exterior coating, select resin carefully so that electrical and mechanical performance of the product is not affected. Before using, please evaluate reliability with the product mounted in your application set.
i. When mount chips with adhesive in preliminary assembly, do appropriate check before the soldering stage, i.e., the size of land pattern, type of adhesive, amount applied, hardening of the adhesive on proper usage and amounts of adhesive to use.
j. Mounting density: Add special attention to radiating heat of products when mounting other components nearby. The excessive heat by other products may cause deterioration at joint of this product with substrate.
k. Since some products are constructed like an open magnetic circuit, narrow spacing between components may cause magnetic coupling.
l. Please do not give the product any excessive mechanical shocks in transportation.
m. Please do not touch wires by sharp terminals such as tweezers to avoid causing any damage to wires.
n. Please do not add any shock and power to the soldered product to avoid causing any damage to chip body.
o. Please do not touch the electrodes by naked hand as the solderability of the external electrodes may deteriorate by grease or oil on the skin.

Confidential for Microgate

(2) PCB Bending Design

The following shall be considered when designing and laying out PCB's.

1. PCB shall be designed so that products are not subjected to the mechanical stress from board warp or deflection.

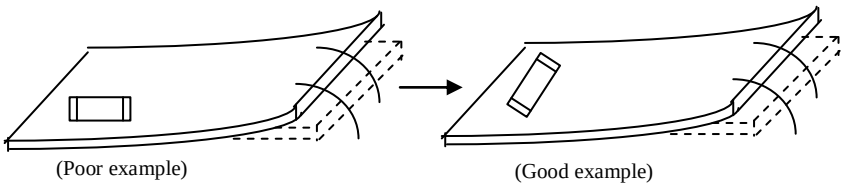

(Poor example) (Good example)

Products shall be located in the sideways direction to the mechanical stress.

2. Products location on PCB separation.

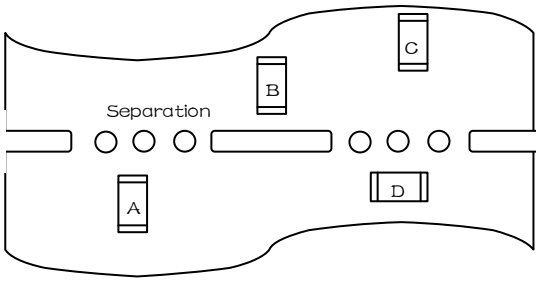

Product shall be located carefully because they may be subjected to the mechanical stress in order of A>C=B>D.

3. When splitting the PCB board, or insert (remove) connector, or fasten thread after mounting components, care is required so as not to give any stress of deflection or twisting to the board. Because mechanical force may cause deterioration of the bonding strength of electrode and solder, even crack of product body. Board separation should not be done manually, but by using appropriate devices.

(3) Recommended PCB Design for SMT Land-Patterns

When chips are mounted on a PCB, the amount of solder used (size of fillet) and the size of PCB Land-Patterns can directly affect chip performance. Therefore, the following items must be carefully considered in the design of solder land patterns.

a. Please use the PCB pad and solder paste we recommend, and contact us in advance if they need to be changed.

b. The amount of solder applied can affect the ability of chips to withstand mechanical stresses which may lead to breaking or cracking. Therefore, when designing land-patterns it is necessary to consider the appropriate size and configuration of the solder pads which in turn determines the amount of solder necessary to form the fillets.

c. When more than one part is jointly soldered onto the same land or pad, the pad must be designed that each component's soldering point is separated by solder-resist.

Recommended land dimensions please refer to product specification.

Confidential for Microgate

13. Cleaning

Products shall be cleaned on the following conditions:

(1) Cleaning temperature shall be limited to 60℃Max. (40℃Max. for IPA)

(2)Ultrasonic cleaning shall comply with the following conditions, avoiding the resonance phenomenon at the mounted products and PCB.

Power: 20W/l Max. Frequency: 28 KHz to 40 KHz Time: 5 minutes Max

(3)Cleaner

a. Alcohol type cleaner

Isopropyl alcohol (IPA)

b. Aqueous agent

Surface Active Agent Type (Clean through-750H)

Hydrocarbon Type (Techno Cleaner-335)

Higher Alcohol Type (Pine Alpha ST-100S)

c. There shall be no residual flux and residual cleaner after cleaning.

In the case of using aqueous agent, product shall be dried completely after rinse with de-ionized water in order to remove the cleaner.

d. Some products may become slightly whitened. However, product performance or usage is not affected.

e. Please take care of winding part while cleaning.

f. After cleaning, parts could be subjected to the next reflow soldering till the solvent remaining on surface of parts being volatilized.

14. Measuring Method of Inductance

(1) Residual elements and stray elements of test fixture can be described by F-parameter shown in following.

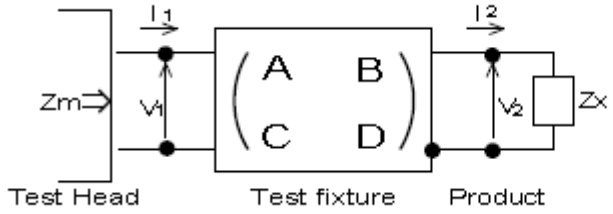

$$\begin{bmatrix} V_1 \\ I_1 \end{bmatrix} = \begin{bmatrix} A & B \\ C & D \end{bmatrix} \begin{bmatrix} V_2 \\ I_2 \end{bmatrix}$$

(2) The impedance of chip coil Zx and measured value Zm can be described by input/output current/voltage.

$$Zm = \frac{V_1}{I_1}, \qquad Zx = \frac{V_2}{I_2}$$

(3) Thus, the relation between Zx and Zm is following:

$$Zx = \alpha \frac{Zm - \beta}{1 - Zm\Gamma}$$

where, $\alpha = D / A = 1$

$\beta = B / D = Zsm - (1 - Yom\ Zsm) Zss$

$\Gamma = C / A = Yom$

(4) Lx and Qx shall be calculated with the following equation.

$$Lx = \frac{Im(Zx)}{2\pi f}, \qquad Qx = \frac{Im(Zx)}{Re(Zx)}$$

Lx: Inductance of chip coil

Qx: Q of chip coil

f: Measuring frequency

Control for Microgate