CUSTOMER:_____ DATE: _____

APPROVAL SPECIFICATION

RoHS+HSF COMPLIANT | **Automotive** | **AEC-Q200**

PRODUCT NAME: SMD power inductor

YOUR PART NO.:

OUR PART NO.: AMAPM0540FTSeries

VERSION: V1.0

RECEPTION **THE SPECIFICATION HAS BEEN ACCEPTED.** **COMPANY:** **DATE:**		
CFMD	**CHKD**	**RCVD**

Confidential for Microgate

MANUFACTURING NAME

SHENZHEN MICROGATE TECHNOLOGY CO.，LTD
Address: Microgate Technology Building, No. 16, Technology Road, Pingshan, Shenzhen, China.
Postcode: 518118
Tel: 86-755-28085000

CFMD.	CHKD.	DSGD.
Charles	Dylan	Wang Yusheng

CATALOG

	Component SPEC Version Record	**3**
1	**Scope**	**4**
2	**Product Identification**	**4**
3	**Appearance, Dimensions and Material**	**4**
4	**Testing Conditions**	**5**
5	**Electrical Characteristics**	**5**
6	**Reliability**	**6-8**
7	**Recommended Soldering Condition**	**9**
8	**Packaging**	**10**
9	**Products Storage**	**11**

Confidential for Microgate

Component SPEC Version Record

Rev.	Effective Date	Changed Contents	Change Reasons	Approved By
V1.0	2026.03.07	New released	/	Bruce

Confidential for Microgate

1. Scope

This specification applies to the AMAPM0540FT series of SMD Power inductors.

2. Product Identification

AMAPM	0540	FT	4R7	M	**	-	LF
①	②	③	④	⑤	⑥		⑦

① Product Symbol. (Automotive electronics products)
② Product dimensions.
③ Special process code.
④ Inductance Value: (R47: 0.47uH 4R7: 4.7uH 100:10uH)
⑤ Inductance Tolerance: (M: ±20% ; N: ±30%)
⑥ Process code
⑦ Lead free product.

3. Appearance, Dimensions and Material

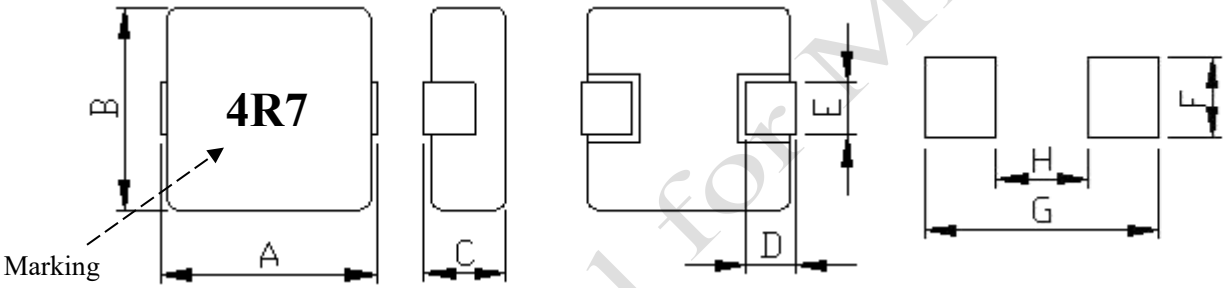

Appearance and dimensions Recommended Land Pattern

Dimensions in mm							
A	B	C	D	E	F	G	H
5.6±0.3	5.2±0.2	4.0Max.	1.2±0.3	2.0±0.3	2.5 ref	7.0 ref	2.8 ref

3.2 Material List

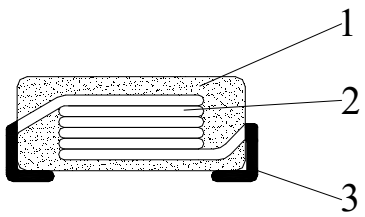

No.	Item	Material
1	Core	Alloy Material
2	Wire	Enameled Copper Wire
3	Terminal	Tin Covered Copper

Confidential for Microgate

4. Testing Conditions

Unless otherwise specified, the standard conditions for measurement/test as:
Ambient Temperature : 5 to 35℃
Relative Humidity: 25 to 85% RH
Atmospheric Pressure: 86 to 106 kPa

If any doubt on the results, measurements/tests should be made within the following limits:
Ambient Temperature : 25±1℃
Relative Humidity: 60 to 70% RH
Atmospheric Pressure: 86 to 106 kPa

5. Electrical Characteristics And Test Instruments

Microgate Part No.	Inductance L0 (uH) 100KHz/1V	DCR (mΩ)		Isat(A)		Irms(A)	
		Max	Typ.	Max	Typ.	Max	Typ.
AMAPM0540FT2R2M**-LF	2.2±20%	24.0	21.8	9.3	10.9	6.2	6.9
AMAPM0540FT4R7M**-LF	4.7±20%	39.5	35.9	6.7	7.8	4.5	5.0
AMAPM0540FT6R8M**-LF	6.8±20%	56.6	47.0	5.4	6.3	3.9	4.3
AMAPM0540FT100M**-LF	10±20%	98.0	90.0	2.6	4.0	2.1	3.0
AMAPM0540FT220M**-LF	22±20%	174	158	2.9	3.4	2.2	2.4

Test instruments and remarks

* All test data is referenced to 25℃ ambient.
* L test by CHROMA 3302 meter or equivalent
* DCR test by Tonghui TH2516B meter or equivalent
* CHROMA 3302 and 1320 meter for IDC;
*Isat: DC current (A) that will cause L0 to drop approximately 30%.
*Irms: DC current (A) that will cause an approximate ΔT of 40℃).
* Operating temperature: -55℃ to +155℃(Including self temperature rise).
* The part temperature (ambient + temp rise) should not exceed 155℃ under worse case operating conditions. Circuit design, component placement, PCB trace size and thickness, airflow and other cooling provision all affect the part temperature. Part temperature should be verified in the end application.

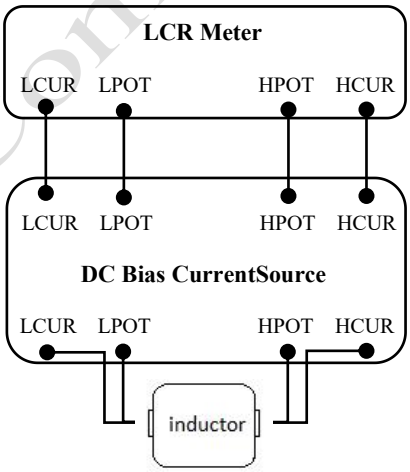

Isat test schematic diagram

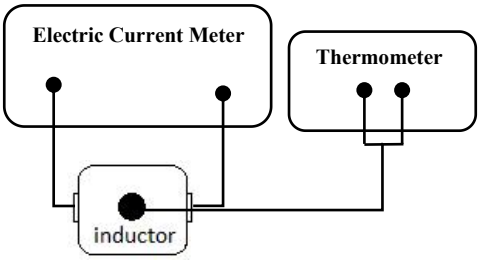

Irms test schematic diagra

Confidential for Microgate

6. Reliability

No.	Item	Requirements	Test Methods and Remarks	Reference	Sample Size
1	Solderability	Terminal area must have 95% min. solder coverage.	①Temperature:245± 5℃, flux 5-10 s. ②Sample immersion tin furnace 5 ±0.5s. ③Immersed and in and out of speed: 25 ± 6mm/s.	AEC-Q200 (J-STD-002)	15
2	Resistance to Soldering Heat	(1) No physical damage.. (2) | ΔL0/L0 | ≤10%	①The peak temperature: 260+5/-0℃. ②Reflow:3times. ③Temperature curve is as below: 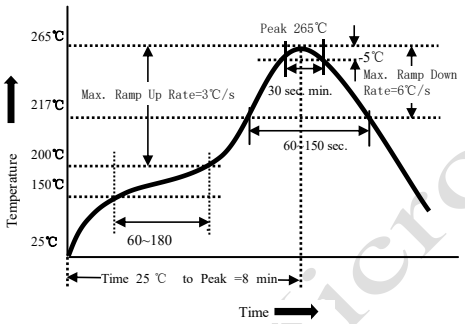	AEC-Q200 (MIL-STD-202 Method 210)	30
3	High Temperature Storage	(1) No physical damage.. (2) | ΔL0/L0 | ≤10%	①Temperature: 155±2℃. ②Time : 1000 hours. ③Measurement at 24±4 hours after test conclusion. 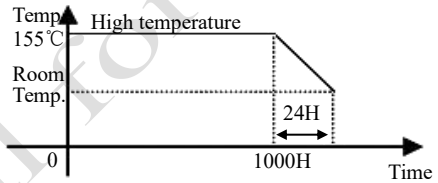	AEC-Q200 (MIL-STD -202 Method 108)	77
4	Temperature Cycling	(1) No physical damage.. (2) | ΔL0/L0 | ≤10%	①1000 cycles (-40℃ to +155℃). ②30min maximum dwell time at each temperature extreme. 1 min. maximum transition time. ③Measurement at 24±4 hours after test conclusion.	AEC-Q200 (JESD22-A104)	77
5	Resistance to Solvents	(1) No physical damage.. (2) | ΔL0/L0 | ≤10%	①Prepare solvent (isopropyl alcohol: kerosene: ethylbenzene =4:9:3 volume) ②Specimen be completely immersed in solvent for 3+0.5/-0min ③Brush dipped in solution until wetted and brush part 10 strokes . ④Repeat 2 more times, Air blow dry. ⑤Inspect at 3x magnifier for marking and 10x for part damage. Note: Add Aqueous wash chemical. OKEM Clean or equivalent. Do not use banned solvents.	AEC-Q200 (MIL-STD-202 Method 215)	5

Confidential for Microgate

No.	Item	Requirements	Test Methods and Remarks	Reference	Sample Size
6	ESD	(1) No physical damage.. (2)｜ΔL0/L0｜≤10%	①3 times in each of terminals and top side of component. ②Direct contact discharge: 1C(1000V(DC) to <2000V(DC))	AEC-Q200 (AEC-Q200-002)	15
7	Biased Humidity	(1) No physical damage.. (2)｜ΔL0/L0｜≤10%	①1000 hours, 85°C/85%RH. ②Unpowered. ③Measurement at 24±4 hours after test conclusion.	AEC-Q200 (MIL-STD -202 Method 103)	77
8	Terminal Strength	(1) No physical damage.. (2)｜ΔL0/L0｜≤10%	①The test samples shall be soldered to the board. ②17.64N, 60s 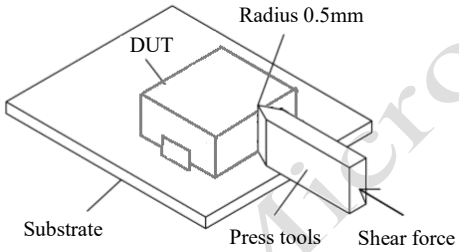 	AEC-Q200 (AEC-Q200-006)	30
9	Board Flex	(1) No physical damage.. (2)｜ΔL0/L0｜≤10%	①Part mounted on a 100mm*40mm FR4 PCB board, which is 1.6±0.2 mm thick. ②Bending speed is 1mm/s. ③Keeping the P.C Board 2 mm minimum for 60 seconds. 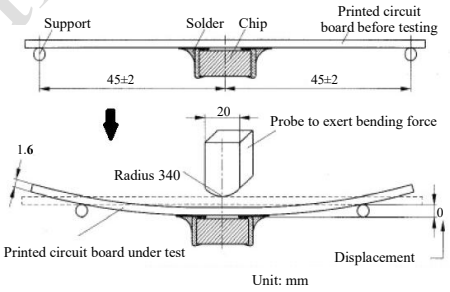 	AEC-Q200 (AEC-Q200-005)	30
10	Vibration	(1) No physical damage.. (2)｜ΔL0/L0｜≤10%	①Frequency range : 10~2000Hz. ②Amplitude: 1.5mm, 5g. ③Sweep time and duration: 10~2000~10Hz for 20 minutes. ④Each four hours in X,Y,Z direction, 12 hours in total.	AEC-Q200 (MIL-STD-202 Method 204)	30
11	Mechanical Shock	(1) No physical damage.. (2)｜ΔL0/L0｜≤10%	①Peak acceleration:100G/S ②Duration of pulse:6ms ③3times in each of 6(±X, ±Y, ±Z) axes.	AEC-Q200 (MIL-STD-202 Method 213)	30

Confidential for Microgate

No.	Item	Requirements	Test Methods and Remarks	Reference	Sample Size
12	Loading at High Temperature	(1) No physical damage.. (2)｜ΔL0/L0｜≤10%	①Temperature: 105±2℃. ②Time : 1000 hours. ③Applied Current : Rated current. ④Measurement at 24±4 hours after test conclusion.	AEC-Q200 (MIL-PRF-27)	77
13	Physical Dimension	According to specification	Verify physical dimensions to the applicable device detail specification.	AEC-Q200 (JESD22-B100)	30
14	Electrical Characterization	According to specification	Parametrically test per lot and sample size requirements, summary to show Min, Max, Mean and Standard deviation at room as well as Min and Max operating temperatures.	AEC-Q200 (User Spec.)	77

*All above experiments items need 3 Lot., sample size is as specified in the table above.

*Sample size standard is from AEC-Q200 : qualification sample size requirements.

Confidential for Microgate

7. Recommended Soldering Conditions

(1) Reflow soldering conditions

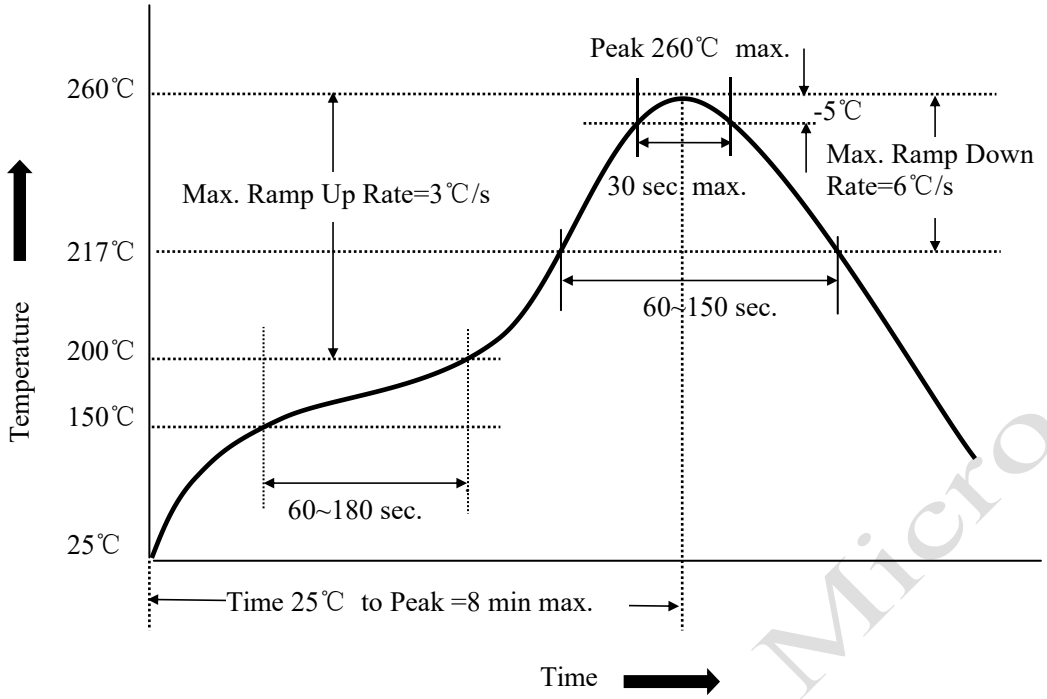

*Above reflow soldering curve is from J-STD-020D.

(2) Iron soldering

The following conditions must be strictly followed when using a soldering iron.

Pre-heating	150℃ 1 minute
Tip temperature	350℃ max
Soldering iron output	30w max
End of soldering iron	Φ 1mm max
Soldering time	3 seconds max

Confidential for Microgate

8.Packaging Information

(1) Dimension of tape (Unit: mm)

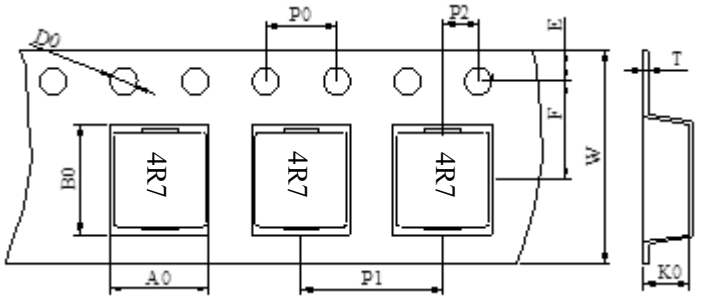

W	12.0±0.3
F	5.5±0.1
E1	1.75±0.1
A0	5.60±0.2
B0	6.20±0.2
P0	4.0±0.1
P1	8.0±0.1
P2	2.0±0.05
K0	4.3±0.2
T	0.30±0.10
D0	1.5+0.1/-0.0

(2) Dimension of reel (Unit: mm)

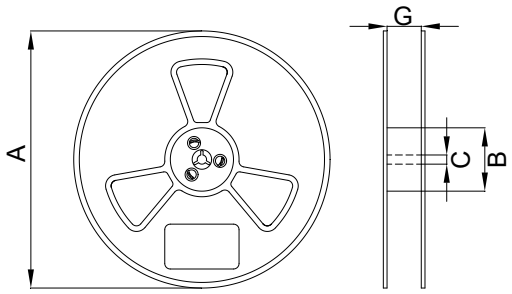

Symbol	Dimension
A	330±2
B	100±2
C	13.5±0.2
G	14.3±0.5

(3) Taping figure and drawing direction

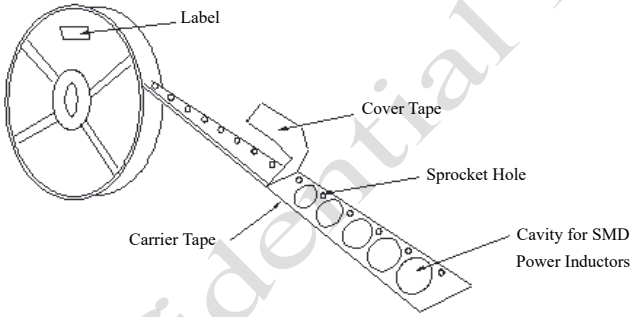

(4) Packaging quantities: 1000PCS/Reel.

(5) Peeling strength of cover tape:

The peel force of top cover tape shall be between 0.1N to 1.3 N.

Room Temp. (℃)	Room Humidity (%)	Room aim (hpa)	Peel Speed (mm/min)
5-35	45-85	860-1060	300

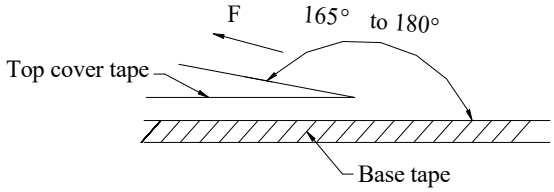

Confidential for Microgate

9. Products Storage

(1) Storage period

Products which inspected in MICROGATE over 12 months ago should be examined and used, which can be confirmed with inspection No. marked on the container. Solderability should be checked if this period is exceeded.

(2) Storage conditions

Products should be storage in the warehouse on the following conditions:

Temperature: -10 ~+ 35℃

Humidity: Less than 70% relative and humidity

No rapid change on temperature and humidity.

(3) Don't keep products in corrosive gases such as sulfur, chlorine gas or acid, or it may cause oxidization of electrode, resulting in poor solderability.

(4) Products should be storage on the palette for the prevention of the influence from humidity, dust and so on.

(5) Products should be storage in the warehouse without heat shock, vibration, direct sunlight and so on.

(6) Products should be storage under the airtight packaged condition.

Confidential for Microgate