MULTILAYER CHIP CERAMIC INDUCTORS

AIMC-0805

2.00 x 1.25 x 0.85mm

RoHS Compliant

FEATURES:

- High self-resonant frequency
- Multilayer monolithic construction yields high reliability
- Excellent solderability & heat resistance for reflow soldering

APPLICATIONS:

- Bluetooth
- Mobile phones such as GSM, CDMA, PDC
- High frequency telecommunication circuits
- Other high frequency circuit general use

STANDARD SPECIFICATIONS:

PARAMETERS	
ABRACON P/N:	AIMC-0805-xxx Series
Operating temperature:	-55°C to + 125°C
Storage temperature:	-55°C to + 125°C

Part No.	L(nH)	Tolerance	L,Q Test Freq. (MHz)	Q (MIN)	SRF(MHz) (min)	DCR(Ω) (max)	Ir(mA) (max)
AIMC-0805-1N5	1.5	S, D	100	10	6000	0.10	600
AIMC-0805-1N8	1.8	S, D	100	10	6000	0.10	600
AIMC-0805-2N2	2.2	S, D	100	10	6000	0.10	600
AIMC-0805-2N7	2.7	S, D	100	12	6000	0.10	600
AIMC-0805-3N3	3.3	S, D, K	100	12	6000	0.13	600
AIMC-0805-3N9	3.9	S, D, K	100	12	5400	0.15	600
AIMC-0805-4N7	4.7	S, D, K	100	12	4000	0.20	400
AIMC-0805-5N6	5.6	S, D, K	100	15	3500	0.23	400
AIMC-0805-6N8	6.8	J, K	100	15	2800	0.25	400
AIMC-0805-8N2	8.2	J, K	100	15	2400	0.28	400
AIMC-0805-10N	10	J, K	100	15	2100	0.30	300
AIMC-0805-12N	12	J, K	100	15	1900	0.35	300
AIMC-0805-15N	15	J, K	100	15	1800	0.40	300
AIMC-0805-18N	18	J, K	100	15	1500	0.45	300
AIMC-0805-22N	22	J, K	100	15	1400	0.50	300
AIMC-0805-27N	27	J, K	100	15	1300	0.55	300
AIMC-0805-33N	33	J, K	100	15	1200	0.60	300
AIMC-0805-39N	39	J, K	100	15	1000	0.65	300
AIMC-0805-47N	47	J, K	100	15	900	0.70	300
AIMC-0805-56N	56	J, K	100	15	800	0.75	300
AIMC-0805-68N	68	J, K	100	15	700	0.80	300
AIMC-0805-82N	82	J, K	100	15	600	0.90	300
AIMC-0805-R10	100	J, K	100	15	600	0.90	300
AIMC-0805-R12	120	J, K	100	13	500	0.95	300
AIMC-0805-R15	150	J, K	50	13	500	1.00	300
AIMC-0805-R18	180	J, K	50	13	400	1.20	300
AIMC-0805-R22	220	J, K	50	12	350	1.40	300

Test Conditions
L, Q: HP4291 Impedance Analyzer, 100MHz, 50mV
DCR: HP4263A LCR meter
SRF: HP4291 Impedance analyzer, HP8753 Network analyzer
Ir: DC Power Supplier, Current Meter, Thermometer.
$\Delta L/L$ (initial) $\geq$ -5% or $\Delta T \leq 20^{\circ}C$

Unless otherwise specified
Temperature : Ordinary Temperature (5 to 35˚C)
Humidity : Ordinary Humidity (25 to 85% RH)
Atmospheric Pressure : 86 to 106 kPa

OPTIONS AND PART IDENTIFICATION: (Left blank if standard)

AIMC-0805- [ ] [ ] - [ ]

Inductance Code
Please refer to Electrical Spec Table

Tolerance
S: ±0.3nH*
D: ±0.5nH*
J: ±0.5%*
K: ±10%*

Packaging
T: Tape and Reel (4kpcs / reel)

*S for L = 1.5 ~ 5.6nH
D for L = 1.5 ~ 5.6nH
J for L = 6.8 ~ 220nH
K for L = 3.3 ~ 220nH

30332 Esperanza, Rancho Santa Margarita, California 92688
tel 949-546-8000 | fax 949-546-8001 | www.abracon.com

MULTILAYER CHIP CERAMIC INDUCTORS

AIMC-0805

RoHS

2.00 x 1.25 x 0.85mm

OUTLINE DRAWING:

Dimension: mm [inch]

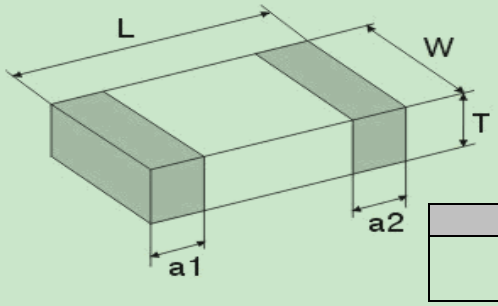

Series	L	W	T	a1,a2
AIMC-0805	2.00±0.20	1.25±0.20	0.85±0.30	0.50±0.30
	[0.079±0.008]	[0.049±0.008]	[0.033±0.012]	[0.02±0.012]

TAPE & REEL: T = Tape and reel 4,000pcs/reel

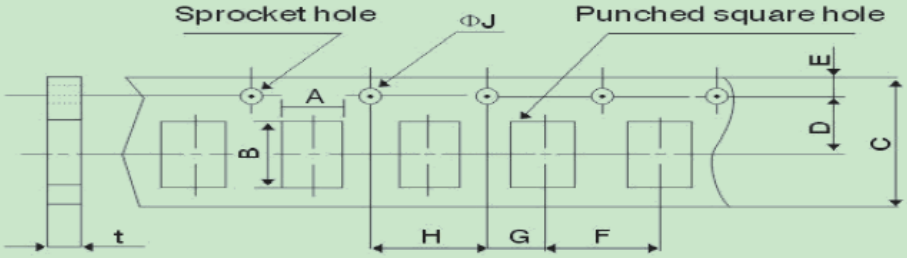

Codes	A	B	C	D	E	F	G	H	ΦJ	t(max)
AIMC-0805	1.5±0.15	2.5±0.2	8.0±0.3	3.5±0.05	1.75±0.1	4.0±0.1	2.0±0.05	4.0±0.1	1.5+0.1/-0	1.1±0.05

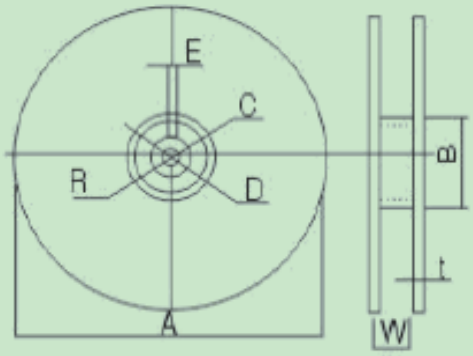

A	178±2
B	60±2
C	13.0±0.5
D	21.0±0.8
E	2.0±0.5
W	10.0±1.15
t	1.2±0.2
R	1.0±0.25

Peeling strength of cover tape

0.3~0.7N (30gf~70gf)

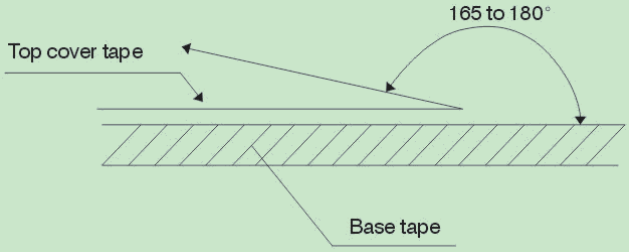

Test condition:
1) peel angle: 165°~180° vs. carrier tape.
2) peel speed: 300 mm/min±10%.

Dimension: mm

30332 Esperanza, Rancho Santa Margarita, California 92688
tel 949-546-8000 | fax 949-546-8001 | www.abracon.com